Ingersoll Rand®

Vehicle Service Solutions

Ingersoll Rand®

Contents

Introduction 2

IR's Racing Heritage 4

Air Ratchets 6

IR103 8
IR1033 8
IR104 8
IR1103 8
IR1133 8
IR107XP 8
IR1077XP 8
IR109XP 9
IR1099XP 9
IR111 9
IR1111 9
IR1107 9
IR1177 9

Air Impact Tools 10

IR211 12
IR212 12
IR215 12
IR216 12
IR2112 13
IR2121 13
IR225 13
IR231C 13
IR231H 14
IR231H-2 14
IR235 14
IR244A 14
IR244-2 14
IR232-TGSL 14
IR2131A 15
IR2131S-2 15
IR2131QT 15
IR2131RT-2 15
IR252 15
IR258 16
IIR261 16
IR261-3 16
IR261-6 16
IR2141 16
IR2161XP 16
IR2161XP-6 17
IR271 17
IR280 17
IR280-6 17
IR280-S6 17
IR285A 18
IR285A-6 18
IR285A-S6 18
IR290 18
IR290-S 18
IR293 19
IR293-S 19
IR295 19
IR295-S 19
IR2080 20
IR2080-6 20
IR2171XP 20

Electric Impact Wrenches 21
IR8005 21
IR8049 21
Accessories 22

Air Hammers 24

IR115 26
IR116 26
IR117 26
IR121 26
IR121K, IR121K6 26
IR125 27
IR132 27
IR116K, IR117K 27
IR116K5 27

Air Cutting Tools & Grinders 28

IR301 30
IR302 30
IR307A 30
IR308 30
IR325 31
IR326 31
IR344, IR3445 31
IR429 31
IR4429 32
IR7802S 32
Accessories/Kits 32-33

Air Finishing Tools 34

IR310 36
IR311A 36
IR312 36
IR313 36
IR314 37
IR315 37
IR317 37
IR318 37
IR319 38
IR327 38
IR327LS 38
IR328B 38
IR4151 39
IR4151-2 39
IR4151-5 39
IR4151-HL 39
Accessories 40

Air Drills/Screwdrivers 41

IR371 43
IR7811, IR7811R 43
IR7811KC, IR7811RKC 43
IR7802 43
IR7802R 44
IR7803 44
IR7803R 44
IR7804R 44
IR7807R 45
IR7816, IR7816R 45
IR7816KC, IR7816KCR 45
Accessories 46

Air Compressors 47

Twin Stack 49
Electric-Driven Single Stage 49
Garage Mate 49
Wheelbarrow 50
Air Sled 50
Two-Stage Gasoline Driven 51
Two-Stage Electric Driven 52
TS Series 53
Premier Series 53
Accessories 54

Lubrication Equipment .58

LP2100-1 59
LP2100-2 59
LP3100-1 59
LP3100-2 59
LP2002-1-B 60
LP2004-1-B 60
LP2006-1-B 60
LP3003-1 60
LP3004-1 60
1/2" Diaphragm Pumps 61
1" Diaphragm Pumps 61
Antifreeze/Water Diaphragm Pump 62
CaCl Tire-Fill Pump 62
U.L. Approved Fuel Pumps 62
Waste/Differential Oil Evacuation . .62
Control Handles 63
Accessories 64

Accessories 66

Tune-Up Kits 67
Protective Tool Boots 68
Couplers 68
Recoil Hoses and Fittings 69
Lubricants 70
Blow Guns 71
Filters, Regulators, and Lubricators 72
Combination Units with Gauge 72
Individual Units 72
Combination Over/Under Filters-Regulators 73
Inline Series Filters-Regulators 73
Liquidator™ Filters/Dryers 73

Pullers & Hoists 74

P-Series Pullers 74
C-Series Pullers 74
PT-8-Trolley Series 74
SL Lever Chain Hoist 76
SMA Manual Chain Hoist 77

Warranty Information 78

Operation and Maintenance 79

Service and Parts Distributors . . .80

Contact Information . . . . . .IBC

Tool Warranty
Ingersoll-Rand tools are built with the finest materials and care to deliver more power, speed, and durability. The Ingersoll-Rand warranty, your assurance of top quality, accompanies all equipment and also appears on page 78.

All Ingersoll-Rand automotive service tools are backed by a one year limited warranty against defects in materials and workmanship.

Be sure to indicate the date code/serial number (located on nameplates) when completing your warranty registration card, provided with each tool.

Air Consumption: Average Air Consumption is calculated based on average intermittent cycles which differs by tool type. Air Consumption Under Load (@ Load) is calculated as follows:

Air Ratchets: Air consumption at free speed.

Air Impact Wrenches: Air consumption with applied load using a 9 rpm break.

Air Hammers: Air consumption with applied load of 20 lbs. (9.1 kg) force.

Air Cutting Tools & Finishing Tools: Air consumption with applied load of 5 to 8 lbs. (2.3 to 3.6 kg) force.

Air Drills/Screwdriver: Air consumption @ Load based on 80% free speed.

Sound Levels: Sound levels for pressure (U.S. standard) tested under load per PNEURIOP 8NTC1.2. Sound levels for power (European CE standard) tested per ISO3744.

Air Compressor Warranty: See your IR distributor for details.

Lubrication Equipment Warranty: See your IR distributor for details.

Tool Rating System

Standard Duty
A durable tool used for general shop applications, offering a good balance between performance and economy.

Heavy Duty
A high-quality tool that delivers more power and added features for more frequent or demanding applications.

Super Duty
Top-quality tools, exceeding all requirements for the most demanding applications. Engineered with special features for top power, speed control, accuracy, and comfort.

Ultra Duty
An exceptional, new-technology tool that redefines the standards of performance.

Ingersoll-Rand Vehicle Service Solutions

The Little Tool With Big Performance

An Expanded Range Of Products…Delivering Power, Speed And Durability For the Professional.

Ingersoll-Rand has not only added innovative new models to the premier line of automotive service tools—now we've expanded our range of solutions with air compressors, wheel and tire changing systems, and lubrication equipment to further enhance the efficiency of your shop.

The new IR1103 1/4" air ratchet wrench fits comfortably in the palm of your hand, with a composite housing and ergonomic grip for precise control. Its patented TwinPawl™ Plus head design and heat-treated components ensure durability and longer life. The 1103 is so versatile and convenient, it just may change the way you work! (See page 8 for details)

The IR2131QT 1/2" air impact wrench provides the features of the class-leading IR2131A model, (at 1/15th the noise of the standard 2131A with an almost 12 decibel reduction in sound output)...and no reduction in power. It incorporates the TwinHammer™ Plus impact mechanism for 30% greater durability, and is available with an extended anvil as well. (See page 15 for details)

Designed for high performance finishing, the new IR4151-2 random orbital sander sports an extra long handle for the comfort and control of two-handed use. It takes curves at 12,000 rpm for swirl-free finishes, and easily converts to vacuum use for a cleaner

All The Power Without All The Noise

workplace. (See page 39 for details)

In addition, you'll find 2 new reversible versions, the 7811 and 7816R models, in our extensive line of air drills, featuring precision control throttles; a new IR258 3/4" impact wrench for fleet service, and a new IR3445 angle grinder for use with 4 1/2" wheels. Moving beyond the tool box, our 65 years of leadership in air compressors brings an extensive line of single stage and dual stage models, gas and electric, from 2 to 30 horsepower. High volume tire shops can profit from our new IntelliTorque™ wheel and tire changing system, which precisely programs tightening torque for greater customer confidence. And, you can now select piston and diaphragm lubrication pumps and accessories for use with grease, motor oil, gear oil and transmission fluid, as well as other liquids. They combine proven Ingersoll-Rand quality with features specifically tailored to you application.

Now you can count on Ingersoll-Rand for top performance throughout the shop.

• Ratchets • Impact Wrenches • Air Hammers • Air Cutting Tools and Grinders • Finishing Tools • Drills/Screwdrivers • Pullers and Hoists • Air Compressors • Lubrication Equipment • Accessories • IntelliTorque™ Wheel and Tire Changing System

Ingersoll-Rand… The Tools You Need To Succeed

Racing Heritage Makes IR Tools The Power On Pit Road

Race teams and their pit crews have relied on the power, speed, and durability of Ingersoll-Rand tools throughout the 50+ year history of NASCAR, and other racing series as well. Whether you're engaged in the frantic precision of a 16-second, four-tire pit stop, or the everyday complexities of automotive service, IR Tools meet the ultimate test of performance.

All IR tools share a racing heritage pioneered by the ThunderGun air impact wrench, and its predecessors. Designed and built specifically for tire changing applications within racing, it complements the instincts of the fastest tire changers by delivering an almost instantaneous blow of torque that removes lug nuts with incredible speed, and retightens them with equally startling precision. It's based on our commercial impact wrenches, which incorporate the same quality of engineering, materials, and craftsmanship. While the ThunderGun is intended for the select few who require absolute speed and power, you can benefit from the same dedication to performance with every

tool addressed in this catalog.

The new LightningGun™ is a 1" drive air impact wrench designed for the specific needs of open wheel racing and other series using a single center lug nut. It complements the ThunderGun, and is offered with left-hand, right-hand, or 50/50 bias torque output.

IR, Ray Evernham, and Evernham Motorsports

Ray Evernham, arguably the most successful crew chief in NASCAR history, is now a team owner, leading Dodge's return to the elite Winston Cup Series. He has been an IR tool user throughout his career, and an IR spokesperson since 1996. As Jeff Gordon's crew chief, Evernham and his team won 47 NASCAR Winston Cup races, three championships, and two Daytona 500s. Today, veteran Bill Elliott drives the Evernham Motorsports #9 Dodge Intrepid R/T, with Jeremy Mayfield behind the wheel of the #19 car, and Casey Atwood in the #7 car, in a joint venture with Ultimate Motorsports. You'll find IR identification on the #9 and #19 crew uniforms and equipment, and IR tools and compressors at work with both teams-in the shop, in the NASCAR garage, and in the pits. Ray and his entire organization depend on IR products because he appreciates the challenges faced by automotive technicians, and knows the value of superior performance.

DAYTONA USA
THE ULTIMATE MOTORSPORTS ATTRACTION
Official Air Tools

EVERNHAM MOTORSPORTS
Official Air Tools

The IR 16-Second Pit Stop Challenge

IR automotive tools are featured in the "16 Second Pit Stop Challenge" at DAYTONA USA - the Ultimate Motorsports Attraction. Located at the Daytona International Speedway in Daytona Beach, Florida, a fast one hour drive from Orlando, DAYTONA USA combines motorsports history and the up-to-the-minute developments in one breathtaking, interactive experience. When in the area, plan a visit, and compete in a live NASCAR/Winston Cup pit stop using the same high performance IR tools that well over 90 percent of the real crews use!

High Performance Apparel and Accessories

Wear or display the distinctive IR racing mark with selections from our new officially licensed merchandise catalog. You'll find a unique range of shirts, jackets, hats, promotional items, and functional mechanic's gear, as well as items highlighting our relationship with Ray Evernham and Evernham Motorsports. It's available in printed form, and also on-line, for even faster, and easier shopping!

Air Ratchets

Compact. Convenient. Real time-savers. Air ratchet wrenches have become essential elements in every serious toolbox. They combine access and power to make jobs more productive and profitable. And Ingersoll-Rand ratchets feature unique qualities that you won't find anywhere else.

TwinPawl Plus

Our latest innovation, the TwinPawl Plus™ head design, utilizes a patented spring and damper system to ensure positive engagement of the pawls in the ratcheting mechanism, to eliminate the skipping and lock-up that can send lesser tools to an early overhaul. You'll find it on our IR109XP model, and on the IR1107 and new IR1103 composite models.

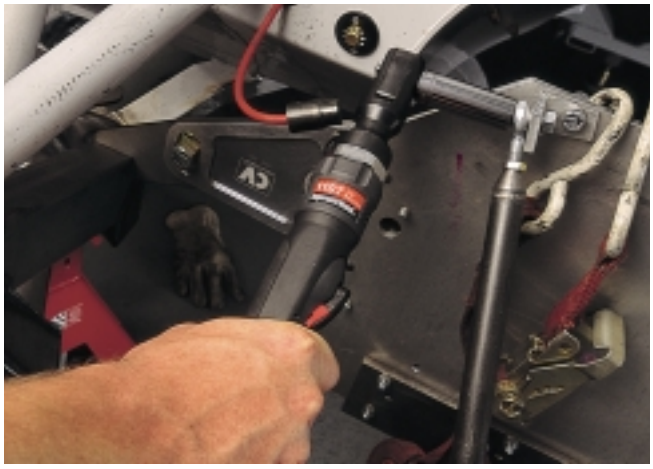

The IR1107 model adds a new dimension of comfort, control, and versatility to the durability of the TwinPawl Plus™ head. Its contoured, ergonomic handle fits like a glove and uses high-strength composites to reduce weight and vibration. The two-speed trigger maximizes the utility of its powerful, efficient motor, while a wealth of other features adds up to an indispensable tool to help you do your best work.

The similar IR1103 model packs similar features into an even more compact size, measuring just 7 1/2 inches in length and weighing just 1 3/4 pounds! Its two-speed power grip ring and ample power and speed mean you'll get in and out of the tightest spaces with ease. The new IR1103 is so versatile and convenient, it may just change the way you work.

Ingersoll-Rand also offers the exclusive IR111 Reactionless Ratchet™, which eliminates the effects of torque kickback after running down nuts and bolts. That's why we call it the Knuckle Saver™. Whatever your requirements, IR can offer a ratchet to fit your budget and your toolbox.

XP EXTRA PERFORMANCE

The XP mark identifies tools upgraded with enhanced features to deliver Extra Performance.

Model Number	Performance Rating	Square Drive in.	Working Torque Range ft.-lb. (Nm)	Maximum Torque ft.-lb. (Nm)	Free Speed (rpm)	Standard Bolt Size in. (mm)	Weight lb. (kg)	Length in. (mm)	Av. Air Consumption cfm (l/min)	@ Load cfm (l/min)	Sound dBA (Pressure/ Power)	Air Inlet NPTF in.	Min. Hose Size in. (mm)
IR103	Standard Duty	1/4	5–20 (7–27)	20 (27)	200	3/8 (10)	1.1 (0.50)	6.5 (165)	2.5 (71)	15 (410)	87.7/100.7	1/4	1/4 (6)
IR1033	Standard Duty	3/8	5–20 (7–27)	20 (27)	200	3/8 (10)	1.1 (0.50)	6.5 (165)	2.5 (71)	15 (410)	87.7/100.7	1/4	1/4 (6)
IR104	Standard Duty	1/4	5–20 (7–27)	20 (27)	200	3/8 (10)	1.1 (0.50)	7.8 (198)	2.5 (71)	13 (368)	90.8/103.8	1/4	1/4 (6)
IR107XP	Heavy Duty	3/8	10–45 (14–61)	50 (68)	160	3/8 (10)	2.49 (1.13)	10.5 (267)	4 (113)	18 (504)	92.5/105.5	1/4	5/16 (8)
IR1077XP	Heavy Duty	1/2	10–45 (14–61)	50 (68)	160	3/8 (10)	2.49 (1.13)	10.5 (267)	4 (113)	18 (504)	92.5/105.5	1/4	5/16 (8)
IR1103	Ultra Duty	1/4	5-25 (7-34)	25 (34)	270	3/8 (10)	1.75 (0.79)	7.5 (190)	4 (113)	21 (600)	89/102.2	1/4	1/4 (6)
IR1133	Ultra Duty	3/8	5-25 (7-34)	25 (34)	270	3/8 (10)	1.75 (0.79)	7.5 (190)	4 (113)	21 (600)	89/102.2	1/4	1/4 (6)
IR1107	Ultra Duty	3/8	10–50 (14–68)	60 (81)	270	3/8 (10)	2.53 (1.2)	10.75 (273)	4 (113)	16 (453)	98/111	1/4	5/16 (8)
IR1177	Ultra Duty	1/2	10–50 (14–68)	60 (81)	270	3/8 (10)	2.53 (1.2)	10.75 (273)	4 (113)	16 (453)	98/111	1/4	5/16 (8)
IR109XP	Super Duty	3/8	10–60 (14–81)	70 (95)	300	3/8 (10)	3.1 (1.4)	11.9 (302)	4 (113)	24 (672)	93.6/106.6	1/4	5/16 (8)
IR1099XP	Super Duty	1/2	10–60 (14–81)	70 (95)	300	3/8 (10)	3.1 (1.4)	11.9 (302)	4 (113)	24 (672)	93.6/106.6	1/4	5/16 (8)
IR111	Super Duty	3/8	10–50 (14–68)	50 (68)	300	3/8 (10)	2.7 (1.22)	10.5 (267)	4 (113)	12 (340)	89.6/102.6	1/4	5/16 (8)
IR1111	Super Duty	1/2	10–50 (14–68)	50 (68)	300	3/8 (10)	2.7 (1.22)	10.5 (267)	4 (113)	12 (340)	89.6/102.6	1/4	5/16 (8)

Air Ratchets

IR103

1/4" Stubby Standard Duty

Air Ratchet Wrench

The “Stubby” lets you squeeze into very snug spaces without feeling squeezed while you run small fasteners. Excellent for body shop repair jobs and light duty work under the dashboard.

- The smallest air ratchet, only 6-1⁄2" long
- Lightweight, only 1-1⁄8 lbs.
- 20 ft.-lbs. maximum torque

IR1033

3/8" Stubby Standard Duty

Air Ratchet Wrench

Same specifications as the IR103 model, but with 3/8" drive.

IR1103

1/4" Ultra Duty

Air Ratchet Wrench

TwinPawl Plus

The IR1103 puts the power and speed of a larger tool neatly in the palm of your hand. It’s perfect for under the hood, under the dash, collision repair, and more-wherever access is the key.

- Exclusive TwinPawl Plus™ head design for durability and long life
- Two-speed power grip ring; ergonomic textured grip
- 25 ft.-lbs. of maximum torque; 270 rpm

IR1133

3/8" Ultra Duty

Air Ratchet Wrench

TwinPawl Plus

Same specifications as the IR1103 model, but with 3/8” drive.

IR104

1/4" Standard Duty

Air Ratchet Wrench

Made to fit in the palm of your hand, this compact ratchet is great for small engine repair, headlight service work, and bench work. So easy to maintain, just dip the head in oil.

- Extra compact
- Easy to maintain
- 20 ft.-lbs. maximum torque

IR107XP

3/8" Heavy Duty

Air Ratchet Wrench

EXTRA PERFORMANCE

Based on the industry’s most popular ratchet, the 107XP delivers an extra measure of durability with an advanced head design, plus a host of other features.

- 50 ft.-lbs. of maximum torque
- Variable speed lever-style throttle
- 360˚ adjustable exhaust directs air away from the operator and the work

IR1077XP

1/2" Heavy Duty

Air Ratchet Wrench

EXTRA PERFORMANCE

Same specifications as the IR107XP model, but with 1/2" drive.

Model Number	Performance Rating	Square Drive in.	Working Torque Range ft.-lb. (Nm)	Maximum Torque ft.-lb. (Nm)	Free Speed (rpm)	Standard Bolt Size in. (mm)	Weight lb. (kg)	Length in. (mm)	Av. Air Consumption cfm (l/min)	@ Load cfm (l/min)	Sound dBA (Pressure/ Power)	Air Inlet NPTF in.	Min. Hose Size in. (mm)
IR103	Standard Duty	1/4	5–20 (7–27)	20 (27)	200	3/8 (10)	1.1 (0.50)	6.5 (165)	2.5 (71)	15 (410)	87.7/100.7	1/4	1/4 (6)
IR1033	Standard Duty	3/8	5–20 (7–27)	20 (27)	200	3/8 (10)	1.1 (0.50)	6.5 (165)	2.5 (71)	15 (410)	87.7/100.7	1/4	1/4 (6)
IR1103	Ultra Duty	1/4	5–25 (7–34)	25 (34)	270	3/8 (10)	1.75 (0.79)	7.5 (190)	4 (113)	21 (608)	89/102.2	1/4	1/4 (6)
IR1133	Ultra Duty	3/8	5–25 (7–34)	25 (34)	270	3/8 (10)	1.75 (0.79)	7.5 (190)	4 (113)	21 (608)	89/102.2	1/4	1/4 (6)
IR104	Standard Duty	1/4	5–20 (7–27)	20 (27)	200	3/8 (10)	1.1 (0.50)	7.8 (198)	2.5 (71)	13 (368)	90.8/103.8	1/4	1/4 (6)
IR107XP	Heavy Duty	3/8	10–45 (14–61)	50 (68)	160	3/8 (10)	2.49 (1.13)	10.5 (267)	4 (113)	18 (504)	92.5/105.5	1/4	5/16 (8)
IR1077XP	Heavy Duty	1/2	10–45 (14–61)	50 (68)	160	3/8 (10)	2.49 (1.13)	10.5 (267)	4 (113)	18 (504)	92.5/105.5	1/4	5/16 (8)

IR1107

3/8" Ultra Duty

Air Ratchet Wrench

TwinPawl Plus

Superior comfort and control meet durabilty and productivity in this tough, high-speed ratchet.

- Two-speed trigger for ultimate versatility and control
- Lightweight composite handle with molded palm swell for superior comfort and grip
- Exclusive IR TwinPawl Plus™ head design for high speed and durability

IR1177

1/2" Ultra Duty

Air Ratchet Wrench

TwinPawl Plus

Same specifications as the IR1107 Model, but with 1/2" drive.

IR109XP

3/8" Super Duty

Air Ratchet Wrench

TwinPawl Plus

EXTRA PERFORMANCE

This is the fastest ratchet in its class, with an optimzed gear ratio and airflow for Extra Performance, coupled with exceptional durability.

- 70 ft.-lbs. maximum torque at 300 rpm free speed
- Exclusive IR TwinPawl Plus™ head design for exceptional durability
- 360˚ adjustable exhaust directs air away from the operator and the work

IR1099XP

1/2" Super Duty

Air Ratchet Wrench

TwinPawl Plus

EXTRA PERFORMANCE

Same specifications as the IR109XP model, but with 1/2" drive.

IR111

The Knuckle Saver™ 3/8" Super Duty

Reactionless Air Ratchet Wrench

This revolutionary Reactionless Ratchet™ has a unique reactionless mechanism. It makes gearing unnecessary and it absorbs kickback when the nut runs tight.

- The fastest air ratchet you can buy
- Up to 50 ft.-lbs. torque
- Rear exhaust directs air away from work
- External grease fitting

IR1111

The Knuckle Saver™ 1/2" Super Duty

Reactionless Air Ratchet Wrench

Same specifications as the IR111 model, but with 1/2" drive.

Model Number	Performance Rating	Square Drive in.	Working Torque Range ft.-lb. (Nm)	Maximum Torque ft.-lb. (Nm)	Free Speed (rpm)	Standard Bolt Size in. (mm)	Weight lb. (kg)	Length in. (mm)	Av. Air Consumption cfm (l/min)	@ Load cfm (l/min)	Sound dBA (Pressure/ Power)	Air Inlet NPTF in.	Min. Hose Size in. (mm)
IR1107	Ultra Duty	3/8	10–50 (14–68)	60 (81)	270	3/8 (10)	2.53 (1.2)	10.75 (273)	4 (113)	16 (453)	98/111	1/4	5/16 (8)
IR1177	Ultra Duty	1/2	10–50 (14–68)	60 (81)	270	3/8 (10)	2.53 (1.2)	10.75 (273)	4 (113)	16 (453)	98/111	1/4	5/16 (8)
IR109XP	Super Duty	3/8	10–60 (14–81)	70 (95)	300	3/8 (10)	3.1 (1.4)	11.9 (302)	4 (113)	24 (672)	93.6/106.6	1/4	5/16 (8)
IR1099XP	Super Duty	1/2	10–60 (14–81)	70 (95)	300	3/8 (10)	3.1 (1.4)	11.9 (302)	4 (113)	24 (672)	93.6/106.6	1/4	5/16 (8)
IR111	Super Duty	3/8	10–50 (14–68)	50 (68)	300	3/8 (10)	2.7 (1.22)	10.5 (267)	4 (113)	12 (340)	89.6/102.6	1/4	5/16 (8)
IR1111	Super Duty	3/8	10–50 (14–68)	50 (68)	300	3/8 (10)	2.7 (1.22)	10.5 (267)	4 (113)	12 (340)	89.6/102.6	1/4	5/16 (8)

Air Impact Tools

They're the most important tools in your shop. Ingersoll-Rand gives you the widest selection of impact tools in the industry, including 3/8", 1/2", 3/4", and 1" drive models.

ORIGINAL SingleHammer ORIGINAL TwinHammer

The twin hammer and jumbo hammer mechanisms are the heart of our premium impact tools. Originally introduced by Ingersoll-Rand, the twin hammer mechanism delivers simultaneous, balanced blows to the anvil, for maximum power output, efficiency, and smoothness.

TwinHammer Plus

Now we've equipped several models with our latest advancement, the TwinHammer Plus mechanism. New geometry and materials combine to further enhance durability and efficiency on the industry's leading tools.

Ingersoll-Rand air impact tools are the wrenches professional mechanics use when nothing else will do the job. They'll break loose a frozen bolt when others can't make it budge. With fewer working parts, simplified maintenance and less wasted energy, Ingersoll-Rand air impact wrenches are the finest examples of delivering MORE POWER for professional mechanics.

Be sure to check our new latest additions, the IR232TGSL Street Legal ThunderGun, IR2131QT and IR258 models!

Model Number	Performance Rating	Working Torque Range ft.–lb. (Nm)	Maximum Torque ft.–lb. (Nm)	Blows Per Min.	Free Spd. (rpm)	Standard Bolt Cap. in. (mm)	Weight lbs. (kg)	Length in. (mm)	Av. Air Consump. cfm (l/min)	@ Load cfm (l/min)	Sound dBA (Press./ Power)	Air Inlet NPTF in.	Min. Hose Size in. (mm)
3/8" Square Drive													
IR211	Hvy.Dty.	20–125 (27–170)	150 (204)	1,500	10,000	3/8 (10)	2.4 (1.09)	6.6 (168)	2.5 (71)	11 (311)	104/117	1/4	3/8 (10)
IR212	Spr.Dty.	20–150 (27–204)	180 (245)	1,500	10,000	7/16 (11)	2.89 (1.31)	6 (152)	2.5 (71)	11 (311)	97.5/110.5	1/4	3/8 (10)
IR215	Hvy.Dty.	15–300 (20–176)	160 (217)	1,600	9,500	7/16 (11)	2.89 (1.31)	6.125 (156)	3.0 (85)	13 (368)	80.6/93.6	1/4	3/8 (10)
IR216	Spr.Dty.	15–160 (20–217)	175 (232)	1,800	8,000	7/16 (11)	2.89 (1.31)	6.125 (156)	3.0 (85)	13 (368)	97.5/110.5	1/4	3/8 (10)
IR2112	Ult.Dty.	25–200 (34–272)	260 (354)	1,500	14,500	7/16 (11)	2.65 (1.20)	5.625 (143)	4 (113)	17 (476)	94.9/107.9	1/4	3/8 (10)
1/2" Square Drive													
IR2121	Ult.Dty.	25–200 (34–272)	260 (312)	1,500	14,500	7/16 (11)	2.65 (1.2)	5.625 (143)	4 (113)	17 (476)	94.9/107.9	1/4	3/8 (10)
IR225	Hvy.Dty.	25–200 (34–272)	325 (441)	1,200	7,500	1/2 (13)	4.25 (1.93)	6.625 (168)	4 (113)	16.3 (456)	90.5/103.5	1/4	3/8 (10)
IR231C	Spr.Dty.	25–300 (34–408)	480 (650)	1,200	8,000	9/16 (14)	5.8 (2.63)	7.3 (185)	4.2 (119)	22 (623)	102/115	1/4	3/8 (10)
IR231H	Spr.Dty.	25–300 (34–407)*	470 (610)	1,200	8,000	9/16 (14)	5.8 (2.63)	7.3 (185)	4.2 (119)	22 (623)	91.2/104.2	1/4	3/8 (10)
IR231H-2	Spr.Dty.Ext.Anv.	25–300 (34–407)*	470 (610)	1,250	8,000	9/16 (14)	4.5 (2.04)	7.1 (180)	4.8 (136)	23 (651)	89/102	1/4	3/8 (10)
IR235	Hvy.Duty	25–225 (34–306)	375 (510)	1,200	9,500	1/2 (13)	5.42 (2.46)	7.75 (197)	4 (113)	17 (474)	104.2/111.6	1/4	3/8 (10)
IR244A	Spr.Dty.	40–350 (54–476)	500 (680)	1,300	7,000	5/8 (16)	6.0 (2.72)	7.3 (185)	5.4 (153)	21 (595)	105/109.3	1/4	3/8 (10)
IR244A-2	Spr.Dty.Ext.Anv.	40–350 (54–476)	500 (680)	1,300	7,000	5/8 (16)	6.28 (2.85)	9.5 (241)	5.4 (153)	21 (595)	105/109.3	1/4	3/8 (10)
IR232TGSL-2	Spr.Dty.	40–400 (54–544)***	500 (680)	1,200	10,000	5/8 (16)	6 (2.72)	7.3 (185)	5.4 (153)	21 (595)	105/109.3	1/4	3/8 (10)
IR2131A	Ult.Dty.	50–400 (68–544)**	450 (612)	1,250	9,500	9/16 (14)	4.5 (2.04)	7.1 (180)	4.8 (136)	23 (651)	89/102	1/4	3/8 (10)
IR2131A-2	Ult.Dty.Ext.Anv.	50–400 (68–544)**	450 (612)	1,250	9,500	9/16 (14)	4.8 (2.18)	9.1 (231)	4.8 (136)	23 (651)	89/102	1/4	3/8 (10)
IR2131QT	Ultra Duty	50-400 (68-544)**	450 (612)	1,250	9500	9/16 (14)	4.5 (2.04)	7.1 9180)	4.8 (136)	23 (651)	82	1/4	3/8 (10)
IR2131QT-2	Ultra Duty	50-400 (68-544)**	450 (612)	1,250	9500	9/16 (14)	4.8 (2.18)	9.1 (231)	4.8 (136)	23 (651)	82	1/4	3/8 (10)
3/4" Square Drive													
IR252	Stnd.Dty.	100–500 (136–680)	750 (1,020)	1,200	6,500	1 (25)	8.6 (3.9)	9 (229)	7.5 (212)	28 (793)	92.1/105.1	3/8	1/2 (13)
IR258	Heavy Duty	200-800 (272-1,088)	1,000 (1,360)	1,100	6,200	1 (25)	10.77 (4.89)	9.8 (249)	8 (226)	30 (835)	93.7/106.7	3/8	1/2 (13)
IR261	Spr.Dty.	200–900 (272–1,224)	1,100 (1,496)	1,000	5,500	1 (25)	12.4 (5.62)	8.8 (224)	9.5 (269)	38 (1076)	101.1/114.1	3/8	1/2 (13)
IR261-3	Spr.Dty.Ext.Anv.	200–900 (272–1,224)	1,100 (1,496)	1,000	5,500	1 (25)	13 (5.90)	11.8 (300)	9.5 (269)	38 (1076)	101.1/114.1	3/8	1/2 (13)
IR261-6	Spr.Dty.Ext.Anv.	200–900 (272–1,224)	1,100 (1,496)	1,000	5,500	1 (25)	13.7 (6.21)	14.8 (376)	9.5 (269)	38 (1076)	101.1/114.1	3/8	1/2 (13)
IR2141	Ult.Dty.	200–900 (271–1,220)	1,200 (1,627)	1,175	7,250	1 (25)	7 (3.2)	8.2 (208)	9.5 (269)	40 (1133)	99	3/8	1/2 (13)
IR2161XP	Ult.Dty.	300–1,000 (407–1,356)	1,250 (1,695)	1,025	6,000	1 (25)	11.8 (5.35)	8.5 (216)	10 (283)	46 (1303)	98/111	3/8	1/2 (13)
IR2161XP-6	Ult.Dty.	300–1,000 (408–1,360)	1,250 (1,695)	1,025	6,000	1 (25)	13.1 (5.95)	14.5 (368)	10 (283)	46 (1303)	98/111	3/8	1/2 (13)
1" Square Drive													
IR280	Spr.Dty.	150–1,000 (204–1,360)	1,600 (2,176)	750	6,000	1 1/4 (32)	22 (9.98)	13 (330)	10 (283)	55 (1557)	109.1/122.1	1/2	1/2 (13)
IR271	Spr.Dty.	200–900 (272–1,224)	1,100 (1,496)	1,000	5,500	1 1/4 (32)	12.5 (5.67)	8.9 (226)	9.5 (269)	39 (1104)	101.1/114.1	3/8	1/2 (13)
IR280-6	Spr.Dty.Ext.Anv.	150–1,000 (204–1,360)	1,600 (2,176)	750	6,000	1 1/4 (32)	23.8 (10.80)	18.5 (470)	10 (283)	55 (1557)	109.1/122.1	1/2	1/2 (13)
IR280-S6	#5Sp.SD.Ext.Anv.	150–1,000 (204–1,360)	1,600 (2,176)	750	6,000	1 1/4 (32)	23.8 (10.80)	18.5 (470)	10 (283)	55 (1557)	109.1/122.1	1/2	1/2 (13)
IR285A	Hvy.Dty.	100–1,000 (136–1,360)	1,450 (1,972)	750	5,000	1 1/4 (32)	22 (10)	13.2 (335)	10 (283)	37 (1047)	107/120	1/2	1/2 (13)
IR285A-6	Hvy.Dty.Ext.Anv.	100–1,000 (136–1,360)	1,450 (1,972)	750	5,000	1 1/4 (32)	25.2 (11.43)	20.1 (511)	10 (283)	37 (1047)	107/120	1/2	1/2 (13)
IR285A-S6	#5Sp.HD.Ext.Anv.	100–1,000 (136–1,360)	1,450 (1,972)	750	5,000	1 1/4 (32)	25.2 (11.43)	20.1 (511)	10 (283)	37 (1047)	107/120	1/2	1/2 (13)
IR290	Spr.Dty.	150–1,000 (204–1,360)	1,600 (2,176)	800	6,000	1 1/4 (32)	21.9 (9.93)	9.75 (248)	10 (283)	60 (1699)	104.6/117.6	1/2	1/2(13)
IR290-S	#5Sp.Spr.Dty.	50–1,000 (204–1,360)	1,600 (2,176)	800	6,000	1 1/4 (32)	21.9 (9.93)	10 (254)	10 (283)	60 (1699)	104.6/117.6	1/2	1/2 (13)
IR293	Spr.Dty.	1,000–1,600 (1,360–2,176)	2,000 (2,720)	810	3,500	1 3/8 (35)	22.8 (10.34)	11.3 (287)	12 (340)	64 (1812)	90.3/103.3	1/2	1/2 (13)
IR293-S	#5Sp.Spr.Dty.	1,000–1,600 (1,360–2,176)	2,000 (2,720)	810	3,500	1 3/8 (35)	22.8 (10.34)	11.3 (287)	12 (340)	64 (1812)	90.3/103.3	1/2	1/2 (13)
IR295	Hvy.Dty.	100–1,000 (136–1,360)	1,450 (1,972)	750	5,000	1 1/4 (32)	22 (9.98)	10.5 (267)	10 (283)	37 (1047)	N/A	3/8	1/2 (13)
IR295-S	#5Sp.Hvy.Dty.	100–1,000 (136–1,360)	1,450 (1,972)	750	5,000	1 1/4 (32)	21.18 (9.61)	10.5 (267)	10 (283)	37 (1047)	N/A	3/8	1/2 (13)
IR2080-6	Ult.Dty.	150-1,200 (204-1,627)	1,600 (2,305)	950	6,800	1 1/4 (32)	16 (7.3)	21.48 (546)	12 (336)	58 (1624)	103.8/116.8	1/2	1/2 (13)
IR2171XP	Ult.Dty.	300–1,000 (408–1,358)	1,250 (1,695)	1,025	6,000	1 (25)	13.1 (5.95)	12.5 (318)	10 (282)	46 (1303)	98/111	1/2	1/2 (13)
IR2080	Ult.Dty.	150-1,200 (204-1627)	1,600 (2,305)	950	6,800	1 1/4 (32)	14 (6.4)	15.38 (391)	12 (336)	58 (1624)	103.8/116.8	1/2	1/2 (13)

** 590 ft.-lbs of maximum torque in reverse bias ** 600 ft.-lbs. of maximum torque in reverse bias *** 625 ft.-lbs. of maximum torque in reverse*

Air Impact Tools

IR211

3/8" Heavy Duty

Air Impact Wrench

Single Hammer Mechanism, Pressure-Feed Lubrication System, and Power Regulator pack plenty of extra power to handle bolts up to 7/16" for oil pan removal, exhaust system work, transmission and bench work.

- Up to 150 ft.-lbs. torque
- Steel hammer case protects the hammer mechanism against punishing use

IR212

3/8" Super Duty

Air Impact Wrench

Tremendous power and longer life make this wrench the popular choice of professional mechanics for exhaust systems, air conditioning, radiators, body shop, and bench work. Still the most powerful 3/8" pistol-grip on the market, it offers all the advantages of the Single Hammer Impact Mechanism for removing and replacing bolts up to 7/16" without a struggle.

- Power up to 180 ft.-lbs
- Unaffected by air pressure changes
- More torque, less vibration
- Pistol-style yet extremely compact and lightweight
- Built-in power regulator prevents over-torquing
- Handle exhaust

IR215

3/8" Heavy Duty

Air Impact Wrench

Our newest 3/8" drive model combines power and economy for general service applications. It provides adjustable power output in forward and reverse with handle exhaust to direct air away from the operator and the work.

- 160 ft.-lbs. of maximum torque
- Two-piece housing for easy service
- Comfortable ergonomic handle design

IR216

3/8" Super Duty

In-Line Air Impact Wrench

The IR216 puts power and ergonomics in the palm of your hand. This durable in-line wrench is handy for the small cramped spaces common to small engine repair and other general service work. The butterfly-style throttle valve lets you adjust speed smoothly in either direction in one continuous motion.

- The most powerful 3/8" palm-grip wrench you can get
- 175 ft.-lbs. of torque
- Contoured composite butterfly throttle for comfort and control
- Recessed regulator dial

Model Number	Performance Rating	Working Torque Range ft.–lb. (Nm)	Maximum Torque ft.–lb. (Nm)	Blows Per Min.	Free Spd. (rpm)	Standard Bolt Cap. in. (mm)	Weight lbs. (kg)	Length in. (mm)	Av. Air Consump. cfm (l/min)	@ Load cfm (l/min)	Sound dBA (Press./ Power)	Air Inlet NPTF in.	Min. Hose Size in. (mm)
3/8" Square Drive *(IR2112 shown on page 13)*													
IR211	Hvy.Dty.	20–125 (27–170)	150 (204)	1,500	10,000	3/8 (11)	2.4 (1.09)	6.6 (168)	2.5 (71)	11 (311)	104/117	1/4	3/8 (10)
IR212	Spr.Dty.	20–150 (27–204)	180 (245)	1,500	10,000	7/16 (11)	2.89 (1.31)	6 (152)	2.5 (71)	11 (311)	97.5/110.5	1/4	3/8 (10)
IR215	Hvy.Dty.	15–300 (20–176)	160 (217)	1,600	9,500	7/16 (11)	2.89 (1.31)	6.125 (156)	3.0 (84)	13 (364)	80.6/93.6	1/4	3/8 (10)
IR216	Spr.Dty.	15–160 (20–217)	175 (232)	1,800	8,000	7/16 (11)	2.89 (1.31)	6.125 (156)	3.0 (85)	13 (368)	97.5/110.5	1/4	3/8 (10)
IR2112	Ult.Dty.	25–200 (34–272)	260 (354)	1,500	14,500	7/16 (11)	2.65 (1.20)	5.625 (143)	4 (113)	17 (476)	94.9/107.9	1/4	3/8 (10)

IR2112

3/8" Ultra Duty

Mini Air Impact Wrench

The new IR2112 is the most powerful and compact 3/8" impact in the world. Now you can rely on power, speed and access like never before, mastering the tightest underhood applications, transmission work, brake and exhaust service, body repair, and more, with a product destined to become essential to every toolbox.

- 260 ft.-lbs. maximum torque
- 14,500 rpm
- 2.65 lbs. and 5.6" in length

IR2121

1/2" Ultra Duty

Mini Air Impact Wrench

The 1/2" drive version of the new IR2112. Same great features, different size anvil.

IR225

1/2" Heavy Duty

Air Impact Wrench

The new IR225 "mini" air impact wrench brings power and speed to motorcycle service, small engine repair and transmission work, and other applications involving tight spaces. Plus, its many comfort and convenience features make it a great value.

- 325 ft.-lbs. of maximum torque
- Six-position power management in forward and reverse
- Handle exhaust directs air away from the operator and the work

IR231C

1/2" Super Duty

Air Impact Wrench

TwinHammer Plus

The classic IR231 is the most popular tool in its class. Introduced over 25 years ago and continuously refined, it offers the sheer power and performance features to tackle the toughest jobs with ease – as well as proven durability and economy.

- Exclusive TwinHammer Plus impact mechanism
- Pressure-feed lubrication
- Adjustable power regulator
- Easy to service two-piece construction
- Contoured handle for comfort and control

Model Number	Performance Rating	Working Torque Range ft.–lb. (Nm)	Maximum Torque ft.–lb. (Nm)	Blows Per Min.	Free Spd. (rpm)	Standard Bolt Cap. in. (mm)	Weight lbs. (kg)	Length in. (mm)	Av. Air Consump. cfm (l/min)	@ Load cfm (l/min)	Sound dBA (Press./ Power)	Air Inlet NPTF in.	Min. Hose Size in. (mm)
1/2" Square Drive													
IR2121	Ult.Dty.	25–200 (34–272)	260 (312)	1,500	14,500	7/16 (11)	2.65 (1.2)	5.625 (143)	4 (113)	17 (476)	94.9/107.9	1/4	3/8 (10)
IR225	Hvy.Dty.	25–200 (34–272)	325 (441)	1,200	7,500	1/2 (13)	4.25 (1.93)	6.625 (168)	4 (113)	16.3 (456)	90.5/103.5	1/4	3/8 (10)
IR231C	Spr.Dty	25–300 (34–408)	480 (650)	1,200	8,000	9/16 (14)	5.8 (2.63)	7.3 (185)	4.2 (119)	22 (623)	102/115	1/4	3/8 (10)
Reverse			600 (816)										

Air Impact Tools

IR231H Model A

1/2" Super Duty

Air Impact Wrench

TwinHammer Plus

This new model redefines the standards set by the classic IR231 model, with the TwinHammer Plus impact mechanism for more power, and in-handle exhaust to direct air away from the operator and the work area.

- 470 ft.-lbs. maximum torque
- Pressure-feed lubrication
- Reverse bias for 590 ft.lbs. maximum torque in reverse
- Increased durability, quieter operation
- More comfortable contoured handle

IR231H-2 Model A

1/2" Super Duty Extended Anvil

Air Impact Wrench

The new model incorporates all the features of the IR231H, with the addition of a 2" extended anvil for use with flip sockets – making it a superior tool for tire changing.

IR244A

1/2" Super Duty

Air Impact Wrench

TwinHammer Plus

Bring out the "big gun" for tire-changing, shock and spring work, front end work, and other heavy automotive and truck work. The TwinHammer Plus impact mechanism pumps out 500 ft.-lbs. torque at a free speed of 7,000 rpm to get the job done fast.

- Powerful, with smooth, balanced blows
- Pressure Feed Lubrication System automatically greases the impact mechanism

IR244A-2

1/2" Super Duty Extended Anvil

Air Impact Wrench

Specifically designed for heavy tire changes, this is the "twin" of the IR244, but with a 2" extended anvil you use with flip sockets.

IR235

1/2" Heavy Duty

Air Impact Wrench

Ingersoll-Rand has packed more power, features, and durability into its most economical 1/2" drive impact wrench. This tool delivers 375 ft.-lbs. of maximum torque with a free speed of 9,500 rpm, to make easier work of general service applications.

- 375 ft.-lbs. of maximum torque
- Handle exhaust
- Balanced design with easy-to-use controls, tease trigger
- Full power in reverse; adjustable power in forward
- High output impact mechanism

IR232-TGSL Street Legal™ ThunderGun®

1/2" Super Duty

Air Impact Wrench

This is our fastest 1/2" impact wrench… and as close as you can get to the real racing tools preferred by NASCAR tire changers. It features 625 ft.-lbs. of torque in reverse, with 10,000 rpm to deliver pit crew power, speed, and durability for shop tasks.

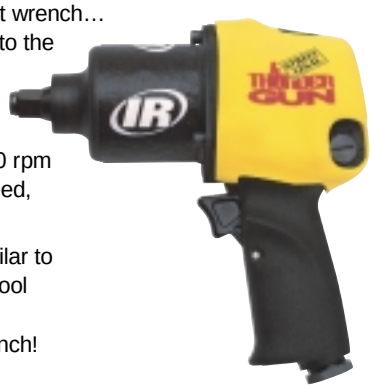

- Distinctive appearance, similar to the IR ThunderGun racing tool
- Adjustable power regulator
- Our fastest 1/2" impact wrench!

Model Number	Performance Rating	Working Torque Range ft.–lb. (Nm)	Maximum Torque ft.–lb. (Nm)	Blows Per Min.	Free Spd. (rpm)	Standard Bolt Cap. in. (mm)	Weight lbs. (kg)	Length in. (mm)	Av. Air Consump. cfm (l/min)	@ Load cfm (l/min)	Sound dBA (Press./ Power)	Air Inlet NPTF in.	Min. Hose Size in. (mm)
1/2" Square Drive													
IR231H Reverse	Spr.Dty.	25–300 (34–407)	470 (610) 590 (816)	1,200	8,000	9/16 (14)	5.8 (2.63)	7.3 (185)	4.2 (119)	22 (623)	91.2/104.2	1/4	3/8 (10)
IR231H-2 Reverse	Spr.Dty.Ext.Anv.	25–300 (34–407)	470 (610) 590 (816)	1,250	8,000	9/16 (14)	4.5 (2.04)	7.1 (180)	4.8 (136)	23 (651)	89/102	1/4	3/8 (10)
IR235	Hvy.Duty	25–225 (34–306)	375 (510)	1,200	9,500	1/2 (13)	5.42 (2.46)	7.75 (197)	4 (113)	17 (474)	104.2/111.6	1/4	3/8 (10)
IR244A	Spr.Dty.	40–350 (54–476)	500 (680)	1,300	7,000	5/8 (16)	6 (2.72)	7.3 (185)	5.4 (153)	21 (595)	105/109.3	1/4	3/8 (10)
IR244A-2	Spr.Dty.Ext.Anv.	40–350 (54–476)	500 (680)	1,300	7,000	5/8 (16)	6.28 (2.85)	9.5 (241)	5.4 (153)	21 (595)	105/109.3	1/4	3/8 (10)
IR232TGSL-2 Reverse	Spr.Dty.	40–400 (54–544)	500 (680) 625 (847)	1,200	10,000	5/8 (16)	6 (2.72)	7.3 (185)	5.4 (153)	21 (595)	105/109.3	1/4	3/8 (10)

IR2131A

1/2" Ultra Duty

Air Impact Wrench

TwinHammer Plus

The IR2131 is the world's most powerful 1/2" impact wrench...and also the most advanced. Its strong yet lightweight construction, even balance, and compact profile provide superior comfort. The innovative motor design and power management system deliver 600 ft.-lbs. of torque in reverse, and power selection of up to 450 ft.-lbs. in forward, for superior flexibility.

- Exclusive TwinHammer Plus impact mechanism
- One-hand push button forward/reverse
- 360 degree swivel inlet and handle exhaust
- Exceptional control with professional touch trigger
- Super strong composite housing with steel hammer case

IR2131A-2

1/2" Ultra Duty Extended Anvil

Air Impact Wrench

TwinHammer Plus

The ultimate in power and control for tire changing, the IR2131S-2 adds a 2" extended anvil for use with flip sockets.

IR2131QT

1/2" Ultra Duty

Quiet Air Impact Wrench

TwinHammer Plus

Quiet TOOL

The IR2131QT combines all of the proven innovations of the IR2131, and reduces sound output by almost 12 dBA-with no loss in power output! It's perfect for high volume tire shops and other situations involving frequent or constant tool use.

- Unique sound reduction advancements reduce sound output to just 82 dBA, with no penalty in power loss
- Exclusive TwinHammer Plus impact mechanism
- Super strong composite housing with steel hammer case and textured grip area

IR2131QT-2

1/2" Ultra Duty Expanded Anvil

Quiet Air Impact Wrench

TwinHammer Plus

Quiet TOOL

The IR2131QT-2 adds a 2" extended anvil, making it perfect for use with flip sockets.

Model Number	Performance Rating	Working Torque Range ft.–lb. (Nm)	Maximum Torque ft.–lb. (Nm)	Blows Per Min.	Free Spd. (rpm)	Standard Bolt Cap. in. (mm)	Weight lbs. (kg)	Length in. (mm)	Av. Air Consump. cfm (l/min)	@ Load cfm (l/min)	Sound dBA (Press./ Power)	Air Inlet NPTF in.	Min. Hose Size in. (mm)
1/2" Square Drive													
IR2131A	Ult.Dty.	50–400 (68–544)	450 (612)	1,250	9,500	9/16 (14)	4.5 (2.04)	7.1 (180)	4.8 (136)	23 (651)	89/102	1/4	3/8 (10)
Reverse			600 (816)										
IR2131A-2	Ult.Dty.Ext.Anv.	50–400 (68–544)	450 (612)	1,250	9,500	9/16 (14)	4.8 (2.18)	9.1 (231)	4.8 (136)	23 (651)	89/102	1/4	3/8 (10)
Reverse			600 (816)										
IR2131QT	Ultra Duty	50-400 (68-544)	450 (612)	1250	9500	9/16 (14)	4.5 (2.04)	7.1 9180)	4.8 (136)	23 (651)	82	1/4	3/8 (10)
Reverse			600 (816)										
IR2131QT-2	Ult.Dty.Ext.Anv.	50-400 (68-544)	450 (612)	1250	9500	9/16 (14)	4.8 (2.18)	9.1 (231)	4.8 (136)	23 (651)	82	1/4	3/8 (10)
Reverse			600 (816)										

Air Impact Tools

IR252

3/4" Standard Duty

Air Impact Wrench

The IR252 is an economical standard duty 3/4" wrench for engine teardowns or general maintenance. This is a good lightweight 3/4" wrench with a high power rating for its compact size.

- Full power in reverse; 3-position adjustable power in forward
- 750 ft.-lbs. of torque
- Handle exhaust
- Integral 360 degree swivel inlet
- Lightweight and easy to operate
- Long, trouble-free life insured by oil bath lubrication

IR258

3/4" Heavy Duty

Air Impact Wrench

The IR258 delivers 1000 ft.-lbs. of maximum torque for work on trucks, heavy equipment, and agricultural machinery. It features an excellent power-to-weight ratio for ease of use, as well as a three-speed power regulator for tailoring output in forward and reverse.

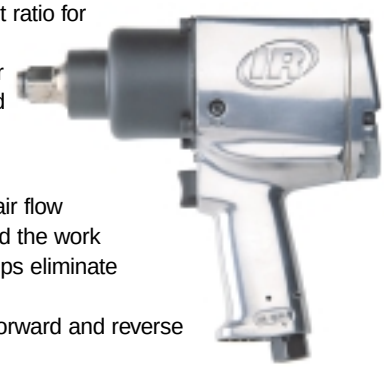

- In-handle exhaust directs air flow away from the operator and the work
- 360 degree swivel inlet helps eliminate twisted hoses
- Fully adjustable power in forward and reverse

IR261

3/4" Super Duty

Air Impact Wrench

The highly-regarded IR261 model combines compact size with high output, which makes it perfect for everything from spring work to pinion nut and track pad removal and major engine teardowns.

- Jumbo hammer mechanism
- Up to 1,100 ft.-lbs. of torque
- Trouble-free, longer performance aided by the Pressure-Feed Lube System
- Compact and only 7-5/8" long
- Handle exhaust

For optional power regulator please order part #2920-K329

Model Number	Performance Rating	Working Torque Range ft.–lb. (Nm)	Maximum Torque ft.–lb. (Nm)	Blows Per Min.	Free Spd. (rpm)	Standard Bolt Cap. in. (mm)	Weight lbs. (kg)	Length in. (mm)	Av. Air Consump. cfm (l/min)	@ Load cfm (l/min)	Sound dBA (Press./ Power)	Air Inlet NPTF in.	Min. Hose Size in. (mm)
3/4" Square Drive													
IR252	Stnd.Dty.	100–500 (136–680)	750 (1,020)	1,200	6,500	1 (25)	8.6 (3.9)	9 (229)	7.5 (212)	28 (793)	92.1/105.1	3/8	1/2 (13)
IR258	Heavy Duty	200-800 (272-1,088)	1,000 (1,360)	1,100	6,200	1 (25)	10.77 (4.89)	9.8 (249)	8 (226)	30 (835)	93.7/106.7	3/8	1/2 (13)
IR261	Spr.Dty.	200–900 (272–1,224)	1,100 (1,496)	1,000	5,500	1 (25)	12.4 (5.62)	8.8 (224)	9.5 (269)	38 (1076)	101.1/114.1	3/8	1/2 (13)

IR261-3

3/4" Super Duty Extended Anvil

Air Impact Wrench

Same specifications as the IR261-6 model, but with 3" extended anvil.

IR261-6

3/4" Super Duty Extended Anvil

Air Impact Wrench

A popular truck tire tool, this model includes all the high-performance features of the IR261. You'll be able to reach lug nuts in deep truck wheels easily with its 6" extended anvil. The tool itself is lightweight and very compact.

IR2141

3/4" Ultra Duty

Air Impact Wrench

TwinHammer Plus

Power means productivity. With best-in-class torque, the 2141 delivers plenty of it in the smallest, lightest package available. Delivers best power-to-weight ratio and best size ratio in its class as well. Great maneuverability for tight, awkward spaces.

- Weighs just 7 lbs.
- Only 8.2" long
- 1200 ft.-lbs. maximum torque
- TwinHammer Plus™ mechanism for 30 percent greater durability
- Contoured professional touch trigger and ergonomically designed handle for increased comfort

IR2161XP

3/4" Ultra Duty

Air Impact Wrench

EXTRA PERFORMANCE

The IR2161 combines a six-vane high output air motor, through-bolt construction, ergonomic handle and housing design to create an impact tool that offers increased power and durability like no other.

- Most powerful 3/4" impact in the industry
- Maximum torque 1,250 ft.-lbs.
- Full power reverse
- 3-position power regulator
- 360 degree swivel inlet

IR2161XP-6

3/4" Ultra Duty

Air Impact Wrench

EXTRA PERFORMANCE

The IR2161-6 offers all of the ergonomic, power and durability enhancing features as the IR2161XP but with an extended anvil for those hard to reach applications.

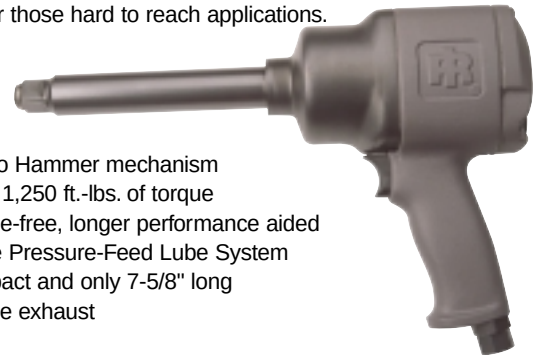

- Jumbo Hammer mechanism
- Up to 1,250 ft.-lbs. of torque
- Trouble-free, longer performance aided by the Pressure-Feed Lube System
- Compact and only 7-5/8" long
- Handle exhaust

Model Number	Performance Rating	Working Torque Range ft.–lb. (Nm)	Maximum Torque ft.–lb. (Nm)	Blows Per Min.	Free Spd. (rpm)	Standard Bolt Cap. in. (mm)	Weight lbs. (kg)	Length in. (mm)	Av. Air Consump. cfm (l/min)	@ Load cfm (l/min)	Sound dBA (Press./ Power)	Air Inlet NPTF in.	Min. Hose Size in. (mm)
3/4" Square Drive													
IR261-3	Spr.Dty.Ext.Anv.	200–900 (272–1,224)	1,100 (1,496)	1,000	5,500	1 (25)	13 (5.90)	11.8 (300)	9.5 (269)	38 (1076)	101.1/114.1	3/8	1/2 (13)
IR261-6	Spr.Dty.Ext.Anv.	200–900 (272–1,224)	1,100 (1,496)	1,000	5,500	1 (25)	13.7 (6.21)	14.8 (376)	9.5 (269)	38 (1076)	101.1/114.1	3/8	1/2 (13)
IR2141	Ult.Dty.	200–900 (271–1,220)	1,200 (1,627)	1,175	7,250	1 (25)	7 (3.2)	8.2 (208)	9.5 (269)	40 (1133)	99	3/8	1/2 (13)
IR2161XP	Ult.Dty.	300–1,000 (407–1,356)	1,250 (1,695)	1,025	6,000	1 (25)	11.8 (5.35)	8.5 (216)	10 (283)	46 (1303)	98/111	3/8	1/2 (13)
IR2161XP-6	Ult.Dty.	300–1,000 (408–1,360)	1,250 (1,695)	1,025	6,000	1 (25)	13.1 (5.95)	14.5 (368)	10 (283)	46 (1303)	98/111	3/8	1/2 (13)

Air Impact Tools

IR271

1" Super Duty

Air Impact Wrench

The shortest 1" drive air impact wrench is also one of the most powerful. It combines a very compact size with high power output, making it ideal for tire changing, spring work, pinion nut and tractor pad removal, and shock work.

- Impressive power-to-size ratio
- Up to 1,100 ft.-lbs. of torque
- Pressure-Feed Lube System for longer service life
- Dead handle improves operator control

IR280

1" Super Duty

Air Impact Wrench

Here's the ultimate in quality, the 1" drive wrench with 1,600 ft.-lbs. torque to handle tough jobs in cramped spaces.

- Built-in Pressure-Feed Lube System
- The side handle adjusts to suit you
- Built-in oil reservoir provides continuous misting of the air motor

IR280-6

1" Super Duty Extended Anvil

Air Impact Wrench

High production truck tire changing requires the brute force only the Jumbo Hammer Impact mechanism delivers. Reach into deep truck wheels easily with the 6" extended anvil wrench, designed for high production truck tire changing.

IR280-S6

#5 Spline Super Duty Extended Anvil

Air Impact Wrench

A standard 6" extended #5 spline drive anvil gives you additional flexibility for certain high production truck tire changing jobs, plus all the power of the rest of the IR280 wrenches.

IR285A

1" Heavy Duty

Air Impact Wrench

The IR285A model combines exceptional power, durability, and operator convenience. It delivers 1,450 ft.-lbs. of maximum torque, with a 5,000 rpm free speed and high efficiency, 6-vane motor. The integral 360 degree swivel inlet makes kinked hoses a thing of the past, and along with the swept-back side handle, provides excellent maneuverability.

- 1,450 ft.-lbs. maximum torque
- Superior balance; "angled-down" exhaust
- High efficiency 6-vane air motor
- Three-position power regulator

Model Number	Performance Rating	Working Torque Range ft.–lb. (Nm)	Maximum Torque ft.–lb. (Nm)	Blows Per Min.	Free Spd. (rpm)	Standard Bolt Cap. in. (mm)	Weight lbs. (kg)	Length in. (mm)	Av. Air Consump. cfm (l/min)	@ Load cfm (l/min)	Sound dBA (Press./ Power)	Air Inlet NPTF in.	Min. Hose Size in. (mm)
1" Square Drive													
IR271	Spr.Dty.	200–900 (272–1,224)	1,100 (1,496)	1,000	5,500	1¼ (32)	12.5 (5.67)	8.9 (226)	9.5 (269)	39 (1104)	101.1/114.1	⅜	½ (13)
IR280	Spr.Dty.	150–1,000 (204–1,360)	1,600 (2,176)	750	6,000	1¼ (32)	22 (9.98)	13 (330)	10 (283)	55 (1557)	109.1/122.1	½	½ (13)
IR280-6	Spr.Dty.Ext.Anv.	150–1,200 (204–1,360)	1,600 (2,176)	750	6,000	1¼ (32)	23.8 (10.80)	18.5 (470)	10 (283)	55 (1557)	109.1/122.1	½	½ (13)
IR280-S6	#5Sp.SD.Ext.Anv.	150–1,000 (204–1,360)	1,600 (2,176)	750	6,000	1¼ (32)	23.8 (10.80)	18.5 (470)	10 (283)	55 (1557)	109.1/122.1	½	½ (13)
IR285A	Hvy.Dty.	100–1,000 (136–1,360)	1,450 (1,972)	750	5,000	1¼ (32)	22 (9.98)	13.2 (335)	10 (283)	37 (1047)	107/120	½	½ (13)

IR285A-6

1" Heavy Duty Extended Anvil

Air Impact Wrench

The same quality features of the IR285 with a standard 6" extended anvil.

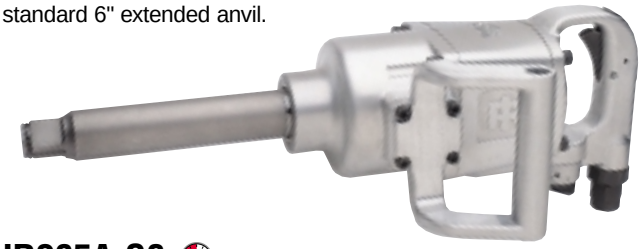

IR285A-S6

#5 Spline Heavy Duty Extended Anvil

Air Impact Wrench

A standard 6" extended #5 spline drive anvil and the other quality features of the IR285. The extended anvil makes these tools perfect for the demanding world of truck tire service.

IR290

1" Super Duty

Air Impact Wrench

Designed for getting into cramped spaces with big power, the IR290 has a three-way adjustable handle. It's a good choice for spring work, tractor pads, bus maintenance, and off-road and farm equipment.

- Up to 1,600 ft.-lbs. of torque
- Pressure-Feed Lube System for long life
- Adjustable side handle for better control.

For optional thread on muffler order part #2910-674

IR290-S

#5 Spline Super Duty

Air Impact Wrench

You get a standard #5 short spline drive anvil and the same quality features as the IR290.

IR293

1" Super Duty

Air Impact Wrench

This is the most powerful 1" wrench for spring work, tractor pads, bus maintenance, and off-road and farm equipment work. The built-in Pressure-Feed Lube System protects the unique Twin Hammer Impact mechanism as it delivers the ultimate in power.

- Up to 2,000 ft.-lbs. of torque
- Most powerful 1" wrench
- Long-lasting tool
- Handle exhaust

IR293-S

#5 Spline Super Duty

Air Impact Wrench

Ultimate power and all the other advantages of the IR293 are built into this tool along with a standard #5 short spline drive anvil.

Model Number	Performance Rating	Working Torque Range ft.–lb. (Nm)	Maximum Torque ft.–lb. (Nm)	Blows Per Min.	Free Spd. (rpm)	Standard Bolt Cap. in. (mm)	Weight lbs. (kg)	Length in. (mm)	Av. Air Consump. cfm (l/min)	@ Load cfm (l/min)	Sound dBA (Press./ Power)	Air Inlet NPTF in.	Min. Hose Size in. (mm)
1" Square Drive													
IR285A-6	Hvy.Dty.Ext.Anv.	100–1,000 (136–1,360)	1,450 (1,972)	750	5,000	1 1/4 (32)	25.2 (11.43)	20.1 (511)	10 (283)	37 (1047)	107/120	1/2	1/2 (13)
IR285A-S6	#5Sp.HD.Ext.Anv.	100–1,000 (136–1,360)	1,450 (1,972)	750	5,000	1 1/4 (32)	25.2 (11.43)	20.1 (511)	10 (283)	37 (1047)	107/120	1/2	1/2 (13)
IR290	Spr.Dty.	150–1,000 (204–1,360)	1,600 (2,176)	800	6,000	1 1/4 (32)	21.9 (9.93)	9.75 (248)	10 (283)	60 (1699)	104.6/117.6	1/2	1/2 (13)
IR290-S	#5Sp.Spr.Dty.	50–1,000 (204–1,360)	1,600 (2,176)	800	6,000	1 1/4 (32)	21.9 (9.93)	10 (254)	10 (283)	60 (1699)	104.6/117.6	1/2	1/2 (13)
IR293	Spr.Dty.	1,000–1,600 (1,360–2,176)	2,000 (2,720)	810	3,500	1 3/8 (35)	22.8 (10.34)	11.3 (287)	12 (340)	64 (1812)	90.3/103.3	1/2	1/2 (13)
IR293-S	#5Sp.Spr.Dty.	1,000–1,600 (1,360–2,176)	2,000 (2,720)	810	3,500	1 3/8 (35)	22.8 (10.34)	11.3 (287)	12 (340)	64 (1812)	90.3/103.3	1/2	1/2 (13)

Air Impact Tools

IR295

1" Heavy Duty

Air Impact Wrench

A new, improved 1" drive tool perfect for truck and heavy equipment maintenance, the IR295 offers power and convenience at an affordable price. It's compact and lightweight, and perfect for working on suspension components, tractor pads, and other big capacity general repair functions.

- Handle exhaust directs air away from the work
- Top-mounted dead handle
- 3-position power regulator provides torque management

IR295-S

#5 Spline 1" Heavy Duty

Air Impact Wrench

The IR295-S offers all the features and benefits of the IR295, but with a standard #5 short spline drive anvil.

IR2080

1" Ultra Duty

Air Impact Wrench

With an innovative, award-winning design and a trim 16-pound weight, the IR2080 1" drive air impact wrench lets technicians stand and deliver performance like never before. The ergonomically-designed handle and grip allow better control, as well as a natural wrist and body positon that eliminates back-bending contortions, so the work gets done faster.

- Revolutionary tire change handle designed specifically for high volume fleet service
- 1,600 ft.-lbs. of torque
- Now features improved anvil, bushing, and exhaust designs
- Recognized by *Business Week* and the Industrial Designers Society of America for excellence in product design.

Model Number	Performance Rating	Working Torque Range ft.–lb. (Nm)	Maximum Torque ft.–lb. (Nm)	Blows Per Min.	Free Spd. (rpm)	Standard Bolt Cap. in. (mm)	Weight lbs. (kg)	Length in. (mm)	Av. Air Consump. cfm (l/min)	@ Load cfm (l/min)	Sound dBA (Press./ Power)	Air Inlet NPTF in.	Min. Hose Size in. (mm)
1" Square Drive													
IR295	Hvy.Dty.	100–1,000 (136–1,360)	1,450 (1,972)	750	5,000	1¼ (32)	22 (9.98)	10.5 (267)	10 (283)	37 (1047)	N/A	⅜	½ (13)
IR295-S	#5Sp.Hvy.Dty.	100–1,000 (136–1,360)	1,450 (1,972)	750	5,000	1¼ (32)	21.18 (9.61)	10.5 (267)	10 (283)	37 (1047)	N/A	⅜	½ (13)

Model Number	Performance Rating	Working Torque Range ft.–lb. (Nm)	Maximum Torque ft.–lb. (Nm)	Blows Per Min.	Free Spd. (rpm)	Standard Bolt Cap. in. (mm)	Weight lbs. (kg)	Length in. (mm)	Av. Air Consump. cfm (l/min)	@ Load cfm (l/min)	Sound dBA (Press./ Power)	Air Inlet NPTF in.	Min. Hose Size in. (mm)
1" Square Drive ***(IR2080-6 and IR2171XP shown on page 21)***													
IR2080	Ultra Dty.	150–1,200 (204–1,627)	1,600 (2,305)	950	6,800	1¼ (32)	14 (6.4)	15.38 (391)	12 (336)	58 (1624)	103.8/116.8	½	½ (13)
IR2080-6	Ultra Dty.	150–1,200 (204–1,627)	1,600 (2,305)	950	6,800	1¼ (32)	16 (7.3)	21.48 (546)	12 (336)	58 (1624)	103.8/116.8	½	½ (13)
IR2171XP	Ultra Dty.	300–1,000 (408–1,360)	1,250 (1,695)	1,025	6,000	1 (25)	13.1 (5.95)	12.5 (318)	10 (282)	46 (1303)	98/111	½	½ (13)

IR2080-6

1” Ultra Duty

Air Impact Wrench

Same specifications as the IR2080 model, but with 6" extended anvil.

IR2171XP

1” Ultra Duty

Air Impact Wrench

The new IR2171 combines a six-vane high output air motor, through-bolt construction, ergonomic handle and housing design to create an impact tool that offers increased power and durability like no other.

- High power-to-weight ratio
- Maximum torque 1,250 ft.-lbs.
- Full power reverse
- 3-position power regulator
- 360 degree swivel inlet

Impact Tools

Electric Impact Wrenches

IR8005

3/8" Heavy Duty

Electric Impact Wrench

Here’s the only 3/8" electric wrench available in the automotive market. This tool can be used for motorcycle work, lawn mower repair, appliance repair, and small engine work. It can also be used for drilling with a keyless impact drill chuck.

- Operates fast, with a convenient reversing switch above trigger
- Powerful, up to 85 ft.-lbs. of torque
- A small, compact design
- Double insulated for safe operation

IR8049

1/2" Heavy Duty

Electric Impact Wrench

Our most popular 1/2" electric impact wrench, it delivers maximum torque of 290 ft.-lbs. The unique reversing mechanism gives you full power in forward and reverse, making it an excellent choice for tire changing, shock absorber replacement, and exhaust system work.

- Up to 290 ft.-lbs. torque
- Durable, made with ball and sleeve bearing construction
- Aluminum hammer case and separator protects the hammer mechanism
- Back-cap reverse switch allows full power in both directions

(Note additional models below)

Model Number	Performance Rating	Square Drive in.	Torque Range ft.-lb. (Nm)	Max. Torque ft.-lb. (Nm)	Blows per Minute	Free Speed (rpm)	Standard Bolt Capacity in. (mm)	Net Weight lbs. (kg)	Overall Length in. (mm)	Amps	Volts
IR8005	Heavy Duty	3/8	5–50 (7–68)	85 (116)	2,200	2,000	3/8 (10)	4.5 (2.02)	10.1 (257)	3.0	120 AC
IR8049	Heavy Duty	1/2	30–180 (40–245)	290 (394)	2,000	1,900	9/16(14)	6.8 (3.03)	11.7 (297)	5.0	120 AC
IR8053	Super Duty	1/2	50–225 (68–306)	330 (449)	1,900	1,900	9/16 (14)	7 (3.15)	10.3 (260)	5.0	120 AC/DC
IR8055	Super Duty	3/4	100–375 (136–500)	500 (680)	1,725	1,700	3/4 (19)	10 (4.5)	11.9 (302)	7.5	120 AC/DC
IR8056	Super Duty	1	300–600 (408–816)	750 (1020)	900	800	1 1/4 (32)	32.5 (14.63)	14.1 (359)	10.0	120 AC/DC
IR8062	Super Duty	5/8*	100–375 (136–500)	500 (680)	1,725	1,700	3/4 (19)	10 (4.5)	11.9 (302)	7.5	120 AC/DC

Air Impact Tools Accessories

Our socket sets include a metal tray for storage. Each socket is heat treated to withstand the pounding of Ingersoll-Rand's powerful impact tools. All are manufactured of high grade steel and are through hardened for top quality and long life.

Super Duty Power Socket Sets 6 Point Impact Sockets

3/8" Drive

Cat. No.	*Description*
72313	3/8" drive set (5/16, 3/8, 7/16, 1/2, 9/16, 5/8, 11/16, 3/4, metal tray)
77314	3/8" drive deep set (5/16, 3/8, 7/16, 1/2, 9/16, 5/8, 11/16, 3/4, metal tray)
72356M	3/8" drive metric set (8, 9, 10, 11, 12, 13, 14, 15, 16, 17, 18, 19, metal tray)
77357M	3/8" drive deep metric set (8, 9, 10, 11, 12, 13, 14, 15, 16, 17, 18, 19, metal tray)

1/2" Drive

Cat. No.	*Description*
74411	1/2" drive set (7/16, 1/2, 9/16, 5/8, 11/16, 3/4, 13/16, 7/8, 15/16, 1, 1-1/16, metal tray)
73412	1/2" drive deep set (3/8, 7/16, 1/2, 9/16, 5/8, 11/16, 3/4, 13/16, 7/8, 15/16, 1, metal tray)
74466M	1/2" drive metric set (10, 11, 12, 13, 14, 15, 16, 17, 18, 19, 20, 21, 22, 23, 24, 27, metal tray)
73467M	1/2" drive deep metric set (10, 11, 12, 13, 14, 15, 16, 17, 18, 19, 20, 21, 22, 23, 24, 27, metal tray)

3/4" Drive

Cat. No.	*Description*
075608L	3/4" drive deep set (7/8, 15/16, 1, 1-1/16, 1-1/8, 1-1/4, 1-5/16, 1-1/2)
075609	3/4" drive set (3/4, 13/16, 7/8, 15/16, 1, 1-1/16, 1-1/8, 1-3/16, 1-1/4, metal tray)
075610	3/4" drive set (3/4, 13/16, 7/8, 15/16, 1, 1-1/16, 1-1/8, 1-3/16, 1-1/4, 1-5/16, 1-3/8, 1-7/16, 1-1/2)

Heavy Duty Power Socket Sets 6 Point Impact Sockets

3/8" Drive

Cat. No.	*Description*
6260A	3/8" drive set (5/16, 3/8, 7/16, 1/2, 9/16, 5/8, 11/16, 3/4, metal tray)
6261D	3/8" drive deep set (5/16, 3/8, 7/16, 1/2, 9/16, 5/8, 11/16, 3/4, metal tray)
6262U	3/8" drive universal set (3/8, 7/16, 1/2, 9/16, 5/8, 11/16, 3/4, metal box)
6270M	3/8" drive metric set (9, 10, 11, 13, 14, 15, 17, 19, metal tray)
6271MD	3/8" drive metric deep set (9, 10, 11, 13, 14, 15, 17, 19, metal tray)
6272MU	3/8" drive metric universal set (10, 12, 13, 14, 15, 17, 19, metal box)

1/2" Drive

Cat. No.	*Description*
6360A	1/2" drive set (7/16, 1/2, 9/16, 5/8, 11/16, 3/4, 13/16, 7/8, 15/16, 1, 1-1/16, 1-1/8, 1-1/4, metal tray)
6361D	1/2" drive deep set (7/16, 1/2, 9/16, 5/8, 11/16, 3/4, 13/16, 7/8, 15/16, 1, 1-1/16, 1-1/8, 1-1/4, metal tray)
6362U	1/2" universal set (1/2, 9/16, 5/8, 11/16, 3/4, 13/16, 7/8, metal box)
6370M	1/2" drive metric set (10,11, 12, 13, 14, 15, 16, 17, 18, 19, 21, 22, 26, 27, metal box)
6370MD	1/2" drive metric deep set (10, 11, 12, 13, 14, 15, 16, 17, 18, 19, 21, 22, 26, 27, metal tray)
6371MU	1/2" drive metric universal set (13, 14, 15, 17, 19, 21, 22, metal box)
7400SMFE	Lugnut service set (7401SF standard flip socket, 7401MF metric flip socket, 7403x 3" extension)

3/4" Drive

Cat. No.	*Description*
6460A	3/4" drive set (1, 1-1/16, 1-1/8, 1-1/4, 1-5/16, 1-3/8, 1-7/16, 1-1/2, metal box)
6461D	3/4" drive deep set (1, 1-1/16, 1-1/8, 1-1/4, 1-5/16, 1-3/8, 1-7/16, 1-1/2, metal box)

1" Drive

Cat. No.	*Description*
6560A	1" drive set (7/8, 15/16, 1, 1-1/16, 1-1/8, 1-3/16, 1-1/4, 1-1/2, metal box)
6561D	1" drive deep set (7/8, 15/16, 1, 1-1/16, 1-1/8, 1-3/16, 1-1/4, 1-1/2, metal box)
6562A	1" drive truck service set (13/16, sq.; 7/8, 15/16, 1, 1-3/16, 1-1/2 hex; 1-1/16, 1-1/8, 1-1/4 deep thin wall hex, metal box)

3/8" Square Drive

Standard Depth

Cat. No.	Nut Size
A7210H	5/16"
A7212H	3/8"
A7214H	7/16"

Deep

Cat. No.	Nut Size
A7210HD	5/16"
A7212HD	3/8"
A7214HD	7/16"
A7218HD	9/16"
A7222HD	11/16"
A7226HD	13/16"
A7228HD	7/8"

Universal

Cat. No.	Nut Size
A7212U	3/8"
A7216U	1/2"

Metric Deep

Cat. No.	Nut Size
A7211MD†	11mm
A7214MD†	14mm
A7221MD†	21mm

Metric Universal

Cat. No.	Nut Size
A7222MU†	22mm

† Availability subject to prior sale

1/2" Square Drive

Standard Depth

Cat. No.	Nut Size
A7414H†	7/16"
A7416H†	1/2"
A7422H†	11/16"
A7428H†	7/8"
A7430H†	15/16"
A7432H†	1"

Deep

Cat. No.	Nut Size
A7418HD†	9/16"
A7420HD†	5/8"
A7422HD†	11/16"
A7432HD†	1"

Flip Socket

Cat. No.	Nut Size
A7401SF	3/4"x13/16"
A7401MF	19 mm x 21 mm
7400SMF	*Set
7400SMFE	**Set

Universal

Cat. No.	Nut Size
A7414U	7/16"
A7416U	1/2"
A7422U	11/16"
A7426U	13/16"
A7428U	7/8"

1/2" Square Drive

Metric Standard Depth

Cat. No.	Nut Size
A7410M	10mm
A7411M	11mm
A7412M	12mm
A7413M	13mm
A7414M	14mm
A7416M	16mm
A7417M	17mm
A7420M	20mm
A7421M	21mm
A7424M	24mm
A7425M	25mm
A7426M	26mm
A7427M	27mm

Metric Deep

Cat. No.	Nut Size
A7410MD†	10mm
A7411MD†	11mm
A7412MD†	12mm
A7413MD†	13mm
A7414MD†	14mm
A7415MD†	15mm
A7416MD†	16mm
A7417MD†	17mm
A7420MD†	20mm
A7421MD†	21mm
A7426MD†	26mm
A7427MD†	27mm

Metric Universal

Cat. No.	Nut Size
A7410MU	10mm
A7413MU	13mm
A7414MU	14mm
A7418MU	18mm
A7420MU	20mm

3/4" Square Drive

Standard Depth

Cat. No.	Nut Size
A07513†	13/16"
A07514†	7/8"
A07515†	15/16"
A07516†	1"
A07517†	1-1/16"
A07518†	1-1/8"
A07520†	1-1/4"
A07522†	1-3/8"
A07523†	1-7/16"

Deep

Cat. No.	Nut Size
A07512D†	3/4"
A07513D†	13/16"
A07516D†	1"
A07517D†	1-1/16"
A07519D†	1-3/16"
A07522D†	1-3/8"
A07523D†	1-7/16"

Deep Thin Wall

Cat. No.	Nut Size
A07517DT†	1-1/16"

Metric Standard

Cat. No.	Nut Size
A07530M†	30mm
A07535M†	35mm

1" Square Drive

Standard Depth

Cat. No.	Nut Size
A10013†	13/16"
A10014†	7/8"
A10015†	15/16"
A10016†	1"
A10017†	1-1/16"
A10019†	1-3/16"
A10022†	1-3/8"
A10025†	1-9/16"
A10028†	1-3/4"
A10029†	1-13/16"
A10033†	2-1/16"
A10039	2-7/16"

1" Square Drive

Deep

Cat. No.	Nut Size
A10014D†	7/8"
A10015D†	15/16"
A10016D†	1"
A10017D†	1-1/16"
A10018D†	1-1/8"
A10019D†	1-3/16"
A10023D†	1-7/16"
A10025D†	1-9/16"
A10027D†	1-11/16"
A10029D†	1-13/16"
A10030D†	1-7/8"
A10031D†	1-15/16"
A10032D†	2"

Deep Thin Wall

Cat. No.	Nut Size
A10017DT†	1-1/16"

Budd Wheel

Cat. No.	Nut Size
A10024HS	1/2" Hex x 13/16" sq.

Metric Standard Depth

Cat. No.	Nut Size
A10027M†	27mm
A10035M†	35mm

Metric Square

Cat. No.	Nut Size
A10017MS†	17mm
A10021MS†	21mm

#5 Spline Drive

Standard Depth

Cat. No.	Nut Size
A09915H†	15/16"
A09919H†	1-3/16"
A09920H†	1-1/4"
A09926H†	1-5/8"
A09928H†	1-3/4"

Air Hammers

Hit harder with less effort and more accuracy as you do general repairs, exhaust system and front end work, bushing driving, and tough cutting jobs, using Ingersoll-Rand air hammers. The IR132 gives you added accuracy and control at 1,725 blows per minute with its "tease throttle" and built-in power regulator. The IR121 has a professional touch trigger for excellent control at 3,000 blows per minute and a tough one-piece alloy barrel for long life.

Ingersoll-Rand air hammers are designed so you can let the tool do the work, whether it's cutting, punching, chipping, or scraping. Each air hammer comes with a coil spring retainer for fast and easy chisel changes. You can also get the Ingersoll-Rand air hammer kit, which includes the five piece chisel kit, or buy them separately.

Also, check out our latest addition – the IR125 needle scaler. It's perfect for surface preparation work.

Model Number	Performance Rating	Shank Opening in. (mm)	Blows Per Minute @90PSI	Bore Diameter in. (mm)	Stroke Length in. (mm)	Weight lbs. (kg)	Length in. (mm)	Av. Air Consumption cfm (l/min)	@ Load cfm (l/min)	Sound dBA (Pressure/ Power)	Air Inlet NPTF in.	Min. Hose Size in. (mm)
IR115	Standard Duty	.401 (10.1)	5,000	3/4 (19)	1 5/8 (41)	2.6 (1.18)	6.1 (155)	2 (57)	14 (396)	101.3/114.3	1/4	3/8 (10)
IR116	Standard Duty	.401 (10.1)	3,500	11/16 (17.5)	2 5/8 (67)	3.4 (1.54)	7.8 (198)	3 (85)	15 (425)	104.4/117.4	1/4	3/8 (10)
IR117	Standard Duty	.401 (10.1)	2,000	11/16 (17.5)	3 1/2 (89)	4.1 (1.86)	9.9 (251)	3 (85)	14 (396)	103.5/116.5	1/4	3/8 (10)
IR121	Super Duty	.401 (10.1)	3,000	3/4 (19)	2 9/32 (58)	3.5 (1.59)	7.63 (194)	3 (85)	15 (425)	98.3/111.3	1/4	3/8 (10)
IR132	Super Duty	.401 (10.1)	1,725	9/16 (14)	4 (102)	3.4 (1.54)	8.5 (216)	3 (85)	11 (311)	N/A	1/4	5/16 (8)

Model Number	Performance Rating	Type	Needle Qty.	Needle Size in. (mm)	Free Speed (rpm)	Bore Diameter in. (mm)	Stroke Length in. (mm)	Weight lbs. (kg)	Length in. (mm)	Av. Air Consumption cfm (l/min)	@ Load cfm (l/min)	Sound dBA (Pressure/ Power)	Air Inlet NPTF in.	Min. Hose Size in. (mm)
IR125	Standard Duty	Needle Scaler	19	1/8 (3.2)	4,600	1 (25)	1 1/8 (28.6)	6.22 (2.82)	18.3 (465)	8 (226)	15 (425)	99.6/112.6	1/4	5/16 (8)

Air Hammers

IR115

Standard Duty

Air Hammer

This powerful, yet economical high-speed air hammer, is designed for light exhaust system work and general cutting, chipping and scraping.

- Up to 5,000 blows per minute
- Alloyed steel barrel and heat-treated piston for longer life
- Built-in power regulator and trigger control

Replacement Retainer

Spring Retainer 115-183

IR116

Standard Duty

Air Hammer

The economical air hammer for fast cutting action, especially for medium exhaust system, panel cutting, and general repair work.

- Up to 3,500 blows per minute
- Handles a range of cutting applications
- Longer life alloyed steel barrel and heat-treated piston

Replacement Retainer

Spring Retainer 115-183

IR117

Standard Duty

Air Hammer

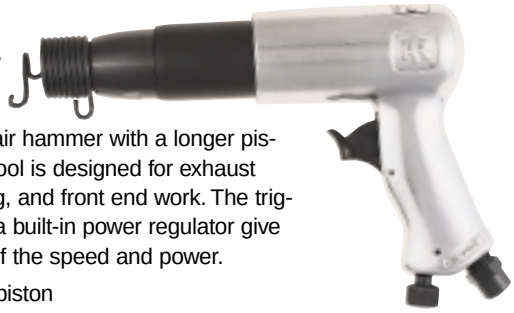

An economical air hammer with a longer piston stroke, this tool is designed for exhaust work, bolt cutting, and front end work. The trigger control and a built-in power regulator give you full control of the speed and power.

- Longer stroke piston
- Alloyed steel barrel and heat-treated piston for longer life
- Up to 2,000 blows per minute

Replacement Retainer

Spring Retainer 115-183

IR121

Super Duty

Air Hammer

Make fast work of body panel crimping and cutting, bushing driving, shearing and general front end work with this air hammer, a super duty tool that produces up to 3,000 blows per minute.

- Professional touch trigger for total control
- Long-life tool with a tough one piece alloy barrel
- Easy to maintain, with an “easy out” throttle valve assembly

Replacement Retainers

Spring Retainer (as shown)	AVC10-183A
Bee-hive	AVC1-83

IR121K6/121K6

Air Hammer Kit

The IR121 is available in kit form with a blowmolded plastic case with a removable lid. To order the complete kit (which includes 6 chisels) use model number IR121K6.

Model Number	Performance Rating	Shank Opening in. (mm)	Blows Per Minute @90PSI	Bore Diameter in. (mm)	Stroke Length in. (mm)	Weight lbs. (kg)	Length in. (mm)	Av. Air Consumption cfm (l/min)	@ Load cfm (l/min)	Sound dBA (Pressure/ Power)	Air Inlet NPTF in.	Min. Hose Size in. (mm)
IR115	Standard Duty	.401 (10.1)	5,000	3/4 (19)	1 5/8 (41)	2.6 (1.18)	6.1 (155)	2 (57)	14 (396)	101.3/114.3	1/4	3/8 (10)
IR116	Standard Duty	.401 (10.1)	3,500	11/16 (17.5)	2 5/8 (67)	3.4 (1.54)	7.8 (198)	3 (85)	15 (425)	104.4/117.4	1/4	3/8 (10)
IR117	Standard Duty	.401 (10.1)	2,000	11/16 (17.5)	3 1/2 (89)	4.1 (1.86)	9.9 (251)	3 (85)	14 (396)	103.5/116.5	1/4	3/8 (10)
IR121	Super Duty	.401 (10.1)	3,000	3/4 (19)	2 9/32 (58)	3.5 (1.59)	7.63 (194)	3 (85)	15 (425)	98.3/111.3	1/4	3/8 (10)

IR132

Super Duty

Air Hammer

Professionals who want the best choose this tool for front end work, heavy exhaust work, riveting, king pin removal, bushing driving, and bolt shearing.

- Extra-sensitive tease throttle controls starting strokes
- Up to 1,725 blows per minute
- Longer stroke piston

Replacement Retainers

Bee-hive (as shown)	AVC1-83
Spring Retainer	AVC10-183A

IR116K, IR117K

Air Hammer Kits

Ingersoll-Rand Air Hammer Kits include air hammer and the matching five-piece chisel kit. Or you can buy the Chisel Kit separately.

IR116-K5

Chisel Kit

Five-piece chisel set in a plastic pouch with .401" shank diameters to match your Ingersoll-Rand Air Hammer. Kit includes:

- Edging Tool
- Tail Pipe Cutter
- Straight Chisel
- Cutting Chisel
- Punch

IR125

Standard Duty

Needle Scaler

For surface preparation work involving the cleaning or removal of paint, rust, dirt, or weld slag, the IR125 is a durable, dependable, economical solution.

- 19 needles
- Each needle 1/8" (3.2mm)
- 4,600 blows per minute at free speed

Chisels available for the IR125

Type	Width/Length 7"	Part No.
Blank		PF2200-391
Chisel	3/4"(19mm)	PF2200-392
Wide Chisel	1 3/8"(35mm)	PF2200-393
Angle Chisel	1 3/8"(35mm)	PF2200-394
Scraper	2"(50mm)	PF2200-390
Scraper	3"(75mm)	PF2200-390-3
Diamond Point	1/4"(6mm)	PF2200-3230
Round Nose	1/4"(6mm)	PF2200-3231
Cape Chisel	1/4"(6mm)	PF2200-3232

Model Number	Performance Rating	Shank Opening in. (mm)	Blows Per Minute @90PSI	Bore Diameter in. (mm)	Stroke Length in. (mm)	Weight lbs. (kg)	Length in. (mm)	Av. Air Consumption cfm (l/min)	@ Load cfm (l/min)	Sound dBA (Pressure/ Power)	Air Inlet NPTF in.	Min. Hose Size in. (mm)
IR132	Super Duty	.401 (10.1)	1,725	9/16 (14)	4 (102)	3.4 (1.54)	8.5 (216)	3 (85)	11 (311)	N/A	1/4	5/16 (8)

Model Number	Performance Rating	Type	Needle Qty.	Needle Size in. (mm)	Free Speed (rpm)	Bore Diameter in. (mm)	Stroke Length in. (mm)	Weight lbs. (kg)	Length in. (mm)	Av. Air Consumption cfm (l/min)	@ Load cfm (l/min)	Sound dBA (Pressure/ Power)	Air Inlet NPTF in.	Min. Hose Size in. (mm)
IR125	Standard Duty	Needle Scaler	19	1/8 (3.2)	4,600	1 (25)	1 1/8 (28.6)	6.22 (2.82)	18.3 (465)	8 (226)	15 (425)	99.6/112.6	1/4	5/16 (8)

Air Cutting Tools & Grinders

With high-strength steels, advanced plastics, and new composite materials in today's cars and trucks, you need versatile tools for precise, controlled cutting. Ingersoll-Rand cutting tools are the reliable choice of auto body and repair shops, used for everything from muffler and exhaust work to sun roof installations and body repairs.

The Ingersoll-Rand air shear, air nibbler, and air reciprocating saw give you speed and power plus tight accuracy for intricate shapes and details. For example, the IR4429 reciprocating saw features increased durability and a composite handle surface for greater comfort and control. It also includes an easy-to-use exhaust hose attachment for a cleaner working environment.

All three of these high quality heavy duty cutting tools make clean cuts in materials including cold rolled steel, most plastics, aluminum, tin, and other materials of up to 18-20 gauge thicknesses. The IR326 air cut-off tool cuts off mufflers and tail pipes quickly, efficiently, and quietly. It also cuts sheet metal, nuts and bolts. Our air die grinders are economical, long-life tools with throttle levers designed to prevent accidental starting and to give you excellent speed control.

Model Number	Performance Rating	Strokes Per Min.	Free Speed (rpm)	Weight lb. (kg)	Length in. (mm)	Av. Air Consumption cfm (l/min)	@ Load cfm (l/min)	Sound dBA (Pressure/ Power)	Air Inlet NPTF in.	Min. Hose Size in. (mm)	Rated Power hp (kW)	Collet Size in.
IR301	Standard Duty	N/A	20,000	.99 (.45)	5 (127)	3 (85)	14 (390)	90/103	1/4	3/8 (10)	.25 (.19)	1/4
IR302	Heavy Duty	N/A	18,000	.97 (.44)	2.9 (74)*	3 (85)	12 (340)	98.4/111.4	1/4	3/8 (10)	.33 (.25)	1/4
IR307A	Standard Duty	N/A	27,000	.69 (.31)	4.75 (121)	3 (85)	14 (390)	84.7/97.7	1/4	3/8 (10)	.25 (.19)	1/4
IR308	Heavy Duty	N/A	25,000	1.16 (.53)	5.63 (143)	3 (85)	20 (566)	95.1/108.1	1/4	3/8 (10)	.33 (.25)	1/4
IR325	Heavy Duty	3,200	N/A	2.1 (.95)	7.3 (185)	4 (113)	17 (481)	90.2/103.2	1/4	3/8 (10)	N/A	N/A
IR326	Heavy Duty	N/A	18,000	2.3 (1.04)	8.88 (226)	10 (283)	25 (708)	94.3/107.3	1/4	3/8 (10)	N/A	N/A
IR344	Super Duty	N/A	13,500	3.7 (1.7)	9.25 (235)	9 (252)	26.5 (742)	80.6/93.6	1/4	3/8 (10)	.8 (.6)	3/8-24 **
IR3445	Super Duty	N/A	12,000	3.7 (1.7)	9.25 (235)	9 (252)	26.5 (742)	82.7/95.6	1/4	3/8 (10)	.8 (.6)	5/8-11
IR429	Heavy Duty	10,000	N/A	1.32 (0.60)	8.25 (210)	8 (226)	7 (198)	87.3/100.3	1/4	3/8 (10)	N/A	N/A
IR4429	Super Duty	5,750	N/A	1.63 (0.74)	9.25 (235)	7 (196)	7 (196)	69.2/82.2	1/4	3/8 (10)	N/A	N/A
IR7802S	Heavy Duty	4,200	N/A	2.8 (1.27)	9.4 (239)	4 (113)	21 (595)	N/A	1/4	3/8 (10)	N/A	N/A

**Height*
***Spindle Size*

Air Cutting Tools & Grinders

IR301

Standard Duty

Multi-Purpose Air Angle Die Grinder

Part of an expanded line of economical, standard duty grinders, the IR301 packs valuable features into a compact package. Use it for grinding, edge-breaking, deburring, porting, and polishing. Wherever space is tight, its right-angle configuration provides easy access.

- Compact, lightweight, easy to handle
- Self-locking throttle
- Ball bearing construction for durability
- Precision machined gearing delivers maximum power transfer

Available in kit form with ten mounted tips (Part #301-K) or eight 3-inch surface conditioning discs and pad (Part #301-3MK).

Also available in kit options.
See page 30 for details.

IR302

Heavy Duty

Air Angle Die Grinder

When a straight tool isn't practical for working in confined areas, this is the economical die grinder with a right angle head to use. It's compact and well-designed for grinding, porting, polishing, deburring, and breaking sharp edges.

- Durable and long-lasting
- All ball bearing construction
- Precision-machined steel gears
- Positive grip 1/4" capacity collet chuck
- Self-locking throttle lever

Available in kit form with eight 3-inch surface conditioning discs and pad (Part #302-3MK).

Also available in kit options.
See page 30 for details.

IR307A

Standard Duty

Mini Air Die Grinder

Part of an expanded line of economical, standard duty grinders, the IR307A combines performance and versatility in a lightweight, compact package. It can be used with all types of accessories for porting, weld breaking, and smoothing sharp edges... as well as deburring, polishing, and grinding.

- Superior maneuverability
- Standard 1/4" collet for all types of accessories
- Safety lever prevents accidental starts
- Front exhaust helps keep work surface clean
- Versatile and reliable

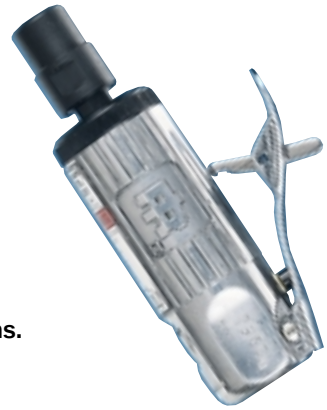

Available in kit form with ten mounted tips (Part #307-K).

Also available in kit options.
See page 30 for details.

IR308

Heavy Duty

Air Die Grinder

A durable yet economical choice offering longer life and higher free speed at 25,000 rpm. A general purpose tool designed for porting, light weld grinding, and breaking sharp edges.

- Ball bearing construction for longer tool life
- Comes with two collet wrenches
- Self-locking throttle lever
- Positive grip 1/4" capacity collet chuck

Model Number	Performance Rating	Free Speed (rpm)	Weight lb. (kg)	Length in. (mm)	Av. Air Consumption cfm (l/min)	@ Load cfm (l/min)	Sound dBA (Pressure/ Power)	Air Inlet NPTF in.	Min. Hose Size in. (mm)	Rated Power hp (kW)	Collet Size in.
IR301	Standard Duty	20,000	.99 (.45)	5 (127)	3 (85)	14 (390)	90/103	1/4	3/8 (10)	.25 (.19)	1/4
IR302	Heavy Duty	18,000	.97 (.44)	2.9 (74)*	3 (85)	12 (340)	98.4/111.4	1/4	3/8 (10)	.33 (.25)	1/4
IR307A	Standard Duty	27,000	.69 (.31)	4.75 (121)	3 (85)	14 (390)	84.7/97.7	1/4	3/8 (10)	.25 (.19)	1/4
IR308	Heavy Duty	25,000	1.16 (.53)	5.63 (143)	3 (85)	20 (566)	95.1/108.1	1/4	3/8 (10)	.33 (.25)	1/4

**Height*

IR325

Heavy Duty

Air Nibbler

Get a bigger bite and better angle cuts with our air nibbler. Instead of shearing or sawing, the tool actually “nibbles” cold rolled steel, plastic, tin, aluminum, and other metals, up to 18 gauge thicknesses at a rate of more than 6 ft. per minute. It’s ideal for paint and auto body shops, tinsmiths, and sheet metal shops.

- Cuts out quarter panels without distorting the edges of the material
- Starts cuts in the center of a panel
- Holds a tight 1/4” radius with great accuracy
- Easy to operate and control
- Balanced, lightweight tool

IR326

Heavy Duty

Air Cut-Off Tool

Exhaust replacement is this powerful tool’s specialty. Now you can cut off mufflers and tail pipes quickly, efficiently, and quietly. It has an 18,000 rpm motor that can handle the toughest exhaust replacements and cut sheet metal, nuts and bolts.

- 3/8" arbor x 2 7/8" wheel size.
- Fast, quiet operation
- Contoured lever throttle with positive self-locking action
- Built-in speed regulator
- 360 degree rotatable chrome-plated spark guard

IR344

Super Duty

Air Angle Grinder

The IR344 is the perfect choice for high performance finishing. This 4" Air Angle Grinder combines a unique motor controller that virtually eliminates overspeeding...with a powerful .8hp motor to provide plenty of power for rust and material removal.

- Rear exhaust with piped-away option
- Composite grip for improved comfort
- Locking lever with tease throttle
- Lightweight design

IR3445

Super Duty

Air Angle Grinder

Same features and specifications as the IR 344, but with now 5/8" spindle and 4 1/2" disc capacity.

IR429

Heavy Duty

Air Reciprocating Saw

The IR429 is a versatile air saw for cutting intricate shapes and light radius curves in all types of plastics, fiberglass, and composite materials, as well as aluminum and sheet metal. This reduced vibration tool is excellent for body shop repair, muffler and exhaust work, and sun roof installations.

- Comes with six high-speed steel cutting blades and two hex wrenches
- Cus flat and curved surfaces
- Durable, long-life tool

Model Number	Performance Rating	Strokes Per Min.	Free Speed (rpm)	Weight lb. (kg)	Length in. (mm)	Av. Air Consumption cfm (l/min)	@ Load cfm (l/min)	Sound dBA (Pressure/ Power)	Air Inlet NPTF in.	Min. Hose Size in. (mm)	Rated Power hp (kW)	Collet Size in.
IR325	Heavy Duty	3,200	N/A	2.1 (.95)	7.3 (185)	4 (113)	17 (481)	90.2/103.2	1/4	3/8 (10)	N/A	N/A
IR326	Heavy Duty	N/A	18,000	2.3 (1.04)	8.88 (226)	10 (283)	25 (708)	94.3/107.3	1/4	3/8 (10)	N/A	N/A
IR344	Super Duty	N/A	13,500	3.7 (1.7)	9.25 (235)	9 (252)	26.5 (742)	80.6/93.6	1/4	3/8 (10)	.8 (.6)	3/8-24**
IR3445	Super Duty	N/A	12,000	3.7 (1.7)	9.25 (235)	9 (252)	26.5 (742)	82.7/95.6	1/4	3/8 (10)	.8 (.6)	5/8-11**
IR429	Heavy Duty	10,000	N/A	1.32 (0.60)	8.25 (210)	8 (226)	7 (198)	87.3/100.3	1/4	3/8 (10)	N/A	N/A

***Spindle Size*

Air Cutting Tools & Grinders

IR4429

Super Duty

Air Reciprocating Saw

With increased comfort, performance, and durability, the IR4429 is a premium tool designed for all types of cutting tasks. It offers a wealth of features for body, exhaust, and muffler work.

- Composite grip area for increased comfort and control
- Piped-away exhaust for a cleaner work area
- Tease trigger with lock-off for smooth operation and protection against accidental starts
- Adjustable guard, integral power regulator, low vibration

IR429/4429 Accessories

Blades

329-500	Package of 6 blades, 3 each fine (32 teeth) and 3 each coarse (24 teeth)
329-F500	Package of 6 blades, fine 32 teeth per inch
329-C500	Package of 6 blades, coarse 24 teeth per inch

IR7802S

Heavy Duty

Air Shear

The versatile cutting shear that makes clean cuts in cold rolled steel up to 20 gauge without chips. Ideal for body shops, sheet metal shops, air conditioning fabricators, plastic fabricators, heating contractors, and machine shops.

- Cuts squares, angles, and circles
- Long-life tool with heavy duty cutting blades
- Shears most types of plastics and all types of aluminum, tin, and steel

IR814

Super Cut

Eight Piece Bur Kit – Wood Case

Contains eight of the most popular types of carbide grinding burs.

IRSA-3	IRSD-1
IRSA-5	IRSD-3
IRSC-1	IRSF-3
IRSC-3	IRSF-5

Model Number	Performance Rating	Strokes Per Min.	Free Speed (rpm)	Weight lb. (kg)	Length in. (mm)	Av. Air Consumption cfm (l/min)	@ Load cfm (l/min)	Sound dBA (Pressure/ Power)	Air Inlet NPTF in.	Min. Hose Size in. (mm)	Rated Power hp (kW)	Collet Size in.
IIR4429	Super Duty	5,750	N/A	1.63 (0.74)	9.25 (235)	7 (196)	7 (196)	69.2/82.2	1/4	3/8 (10)	N/A	N/A
IR7802S	Heavy Duty	4,200	N/A	2.8 (1.27)	9.4 (239)	4 (113)	21 (595)	N/A	1/4	3/8 (10)	N/A	N/A

Kits

IR301-32MK

Surface Conditioning Kit

Ingersoll-Rand has packed your choice of either the IR301 or IR302 in a strong, blowmolded plastic case along with two course and two medium grit 3" 3M Roloc™ surface conditioning pads, two coarse, two medium grit 2" 3M Roloc™ surface conditioning pads and a disc holder. The case can also accommodate:

- 2" Roloc™ surface conditioning discs
- 2" disc holder in place of three-inch discs

IR301-2MK

Surface Conditioning Kit

Ingersoll-Rand has packed your choice of either the IR301 or IR302 in a strong, blowmolded plastic case along with four course and four medium grit 2" 3M Roloc™ surface conditioning pads and a disc holder. The case can also accommodate:

- 2" Roloc™ surface conditioning discs
- 2" discs holder in place of three-inch discs

IR301-3MK

Surface Conditioning Kit

Ingersoll-Rand has packed your choice of either the IR301 or IR302 in a strong, blowmolded plastic case along with four course and four medium grit 3" 3M Roloc™ surface conditioning pads and a disc holder. The case can also accommodate:

- 2" Roloc™ surface conditioning discs
- 2" disc holder in place of three-inch discs

IR301-K/IR307-K

Die Grinder Kit

Ingersoll-Rand has packed your choice of either the IR301 or IR307 in a strong, blowmolded plastic case complete with 10 mounted grinding tips.

IR301

IR307-K

Air Finishing Tools

With all the changes in automotive materials like clear coat finishes, composites, and plastics, you need sanders to match the different jobs. Ingersoll-Rand has the most complete line of sanders and polisher/buffers, from traditional styles for heavy material removal to the newest models for excellent control and brilliant surfaces.

The newest IR4100 Series sanders are also specially designed to keep the air around you and your work surface clean. There are Jet-Vac™ and vacuum-assist models that help maintain a clean, dust-free environment.

These sanders feature internal components designed to run on totally dry air. This also means no oil on the work surface or in the workplace.

All the latest advances have been designed into Ingersoll-Rand's random orbital and orbital sanders. Every detail is shaped to fit your hand perfectly, with a choice of standard and "mini" grips and a wide finger ridge for better feel and control. The IR4100 series even offers a choice of three interchangeable grip rings. The lever throttle takes the pressure off your palm. Vibration and sound are reduced to a minimum. You get the power and precision you need so you can do your best, most sophisticated work.

You can choose from a variety of air sanders, including orbital and air geared sanders, straight line, angle, or vertical sanders. For buffing and polishing paint, metal, or plastic to a high gloss, professional finish, you have a choice of two polisher/ buffers with variable speed control lever throttles to help eliminate paint burning.

All Ingersoll-Rand sanders are designed for long-life service and swirl-free finishes.

Model Number	Performance Rating	Free Speed (rpm)	Rated Power hp (kW)	Pad Diameter in. (mm)	Vacuum Ready	Weight lbs. (kg)	Average Air Consumption cfm (l/min.)	@ Load cfm (l/min.)	Sound dBA (Pressure/ Power)	Air Inlet in.	Min. Hose Size in. (mm)	Spindle in.
IR310	Heavy Duty	10,000	.25	6 (150)	No	4.6 (2.09)	4 (113)	16 (453)	84.2/97.2	1/4	3/8 (10)	5/16 -24
IR311A	Heavy Duty	10,000	.25	6 (150)	No	4.2 (1.91)	4 (113)	17 (481)	85.6/98.6	1/4	3/8 (10)	5/16 -24
IR312	Heavy Duty	8,000	.30 (.22)	3⅔ x 6 3/4 (92 x 171)[b]	No	4.6 (2.09)	6 (170)	12 (340)	94.1/107.1	1/4	3/8 (10)	N/A
IR313	Heavy Duty	5,000	N/A	7 (175)	No	4.2 (1.91)	8 (226)	23 (651)	99.3/112.3	1/4	3/8 (10)	5/8-11
IR314	Heavy Duty	2,500	N/A	7 (175)	No	4.2 (1.91)	8 (226)	22 (623)	97.3/110.3	1/4	3/8 (10)	5/8-11
IR315	Heavy Duty	3,000[a]	N/A	2 3/4 x 17 1/2 (70 x 455)[b]	No	6.6 (2.99)	8 (226)	9 (255)	93.3/106.3	1/4	3/8 (10)	N/A
IR317	Heavy Duty	18,000	N/A	5 (125)	No	2.3 (1.04)	12 (340)	25 (708)	96.5/109.5	1/4	3/8 (10)	N/A
IR318	Heavy Duty	2,800	N/A	7 (175)	No	4.5 (2.04)	6 (170)	21 (595)	90.5/103.5	1/4	3/8 (10)	5/8-11
IR319	Heavy Duty	5,000	N/A	7 (175)	No	4.5 (2.09)	6 (170)	20 (566)	90.8/103.8	1/4	3/8 (10)	5/8-11
IR327	Heavy Duty	22,000	.5 (.38)	3/8 (10)[c]	No	1.6 (.73)	15 (425)	28 (793)	90.9/103.9	1/4	3/8 (10)	3/8 (10)[c]
IR327LS	Heavy Duty	3,000	.5 (.37)	3/8 (10)[c]	No	1.13 (.51)	14 (396)	27 (756)	95/108	1/4	3/8 (10)	3/8 (10)[c]
IR328B	Heavy Duty	900	.25	8 (203)	No	4.7 (2.13)	4 (113)	16 (453)	90.45/93.7	1/4	3/8 (10)	N/A
IR4151	Ultra Duty	12,000	.20 (.15)	6 (152)	Yes	1.92(.87)	8 (226)	15.5 (440)	78/91	1/4	5/16 (8)	N/A
IR4151-2	Ultra Duty	12,000	.20 (.15)	6 (152)	Yes	1.92 (.87)	8 (226)	15.5 (440)	78/91	1/4	5/16 (8)	N/A
IR4151-5	Ultra Duty	12,000	.20 (.15)	6 (152)	Yes	1.92(.87)	8 (226)	15.5 (440)	78/91	1/4	5/16 (8)	N/A
IR4151-HL	Ultra Duty	12,000	.20 (.15)	6 (152)	Yes	1.92(.87)	8 (226)	15.5 (440)	78/91	1/4	5/16 (8)	N/A

a 1" Length Strokes (per min)
b Rectangular Pad Size
c Chuck Size

Air Finishing Tools

IR310

Heavy Duty

Air Dual Action Sander – 6" Pad

The economical, high quality dual action sander used for feather edging, metal preparation and finish work on body filler. The orbital motion is used for fine swirl-free finishes, while the rotary motion is for material removal.

- Vibration-free performance
- Dual action pad
- Balanced ball bearing construction
- Built-in speed regulator

IR311A

Heavy Duty

Air Dual Action Quiet Sander – 6" Pad

A built-in silencer muffles noise as you work with this economical dual action sander. It's a quality sander used for feather edging, metal preparation and finish work on body filler. And its dual action pad motion produces swirl-free finishes.

- Vibration-free
- Dependable performance
- Balanced ball bearing construction
- Adjustable built-in regulator for positive speed control

IR312

Heavy Duty

Air Orbital Sander – 3-2/3" x 6-3/4" Pad

The IR312 air orbital sander has a free speed up to 8,000 rpm to make fast work of smoothing fiberglass, wood, and body filler and to take care of any sanding job on paint, metal, and fiberglass. And you can run the IR312 with one hand, using the compact, contoured palm-grip.

- No vibration plus longer-life
- Balanced ball bearing construction
- Automatic release throttle lever with positive stop action
- Built-in regulator for positive speed control
- Positive locking clamps

IR313

Heavy Duty

Air Angle Sander – 7" Pad

With up to 5,000 rpm free speed, you can work faster on light and heavy sanding jobs, including roughing body filler, removing rust, and smoothing welds.

- Heavy duty motor handles tough jobs
- Lightweight, only 4.2 lbs.
- Ball bearing construction for long life

Model Number	Performance Rating	Free Speed (rpm)	Rated Power hp (kW)	Pad Diameter in. (mm)	Vacuum Ready	Weight lbs. (kg)	Average Air Consumption cfm (l/min.)	@ Load cfm (l/min.)	Sound dBA (Pressure/ Power)	Air Inlet in.	Min. Hose Size in. (mm)	Spindle in.
IR310	Heavy Duty	10,000	.25	6 (150)	No	4.6 (2.09)	4 (113)	16 (453)	84.2/97.2	1/4	3/8 (10)	5/16 -24
IR311A	Heavy Duty	10,000	.25	6 (150)	No	4.2 (1.91)	4 (113)	17 (481)	85.6/98.6	1/4	3/8 (10)	5/16 -24
IR312	Heavy Duty	8,000	.30 (.22)	3⅔ x 6¾ (92 x 171)[b]	No	4.6 (2.09)	6 (170)	12 (340)	94.1/107.1	1/4	3/8 (10)	N/A
IR313	Heavy Duty	5,000	N/A	7 (175)	No	4.2 (1.91)	8 (226)	23 (651)	99.3/112.3	1/4	3/8 (10)	5/8-11

[b] *Rectangular Pad Size*

IR314

Heavy Duty

Air Angle Polisher/Buffer – 7" Pad

A versatile tool with a high free speed range of 1,500-2,500 for buffing and polishing a wide range of surfaces – paint, metal, and plastic – to a high-gloss, professional finish. With its heavy duty motor, this polisher can handle the toughest jobs.

- Long-life, ball bearing construction
- Dead handle and spindle for easy handling
- Built-in regulator
- Up to 2,500 rpm in free speed

IR315

Heavy Duty

Air Twin Piston Straight Line Sander – 2-3/4" x 17-1/2" Pad

The twin piston design keeps extra power in reserve to prevent stalling and tackle sanding jobs like smoothing down body filler or shaping and leveling large flat surfaces.

- 3,000 reciprocating strokes per minute
- Quick action paper clamps
- Smooth, reliable power

IR317

Heavy Duty

Air High-Speed Sander – 5" Pad

For small jobs and hard-to-reach places, the IR317 is an economical high-speed sander ideal for light sanding, feather edging, and rust removal.

- Easy to handle, compact and lightweight
- Built-in power regulator
- Comes with three backing pads, 317-825 1 each 3", 1 each 4", and 1 each 5" (stackable)

IR318

Heavy Duty

Air Vertical Polisher/Buffer – 7" Pad

Buff and polish all painted surfaces easily. This compact, lightweight vertical polisher/buffer gives you the results you want, even on the tough jobs. The variable speed control lever throttle helps eliminate paint burning. Comes complete with a 7" backing pad.

- Long tool life from the planetary gear reduction feature
- Plenty of power from the 1 hp motor
- Handle exhaust directs air away from work area

Model Number	Performance Rating	Free Speed (rpm)	Rated Power hp (kW)	Pad Diameter in. (mm)	Vacuum Ready	Weight lbs. (kg)	Average Air Consumption cfm (l/min.)	@ Load cfm (l/min.)	Sound dBA (Pressure/ Power)	Air Inlet in.	Min. Hose Size in. (mm)	Spindle in.
IR314	Heavy Duty	2,500	N/A	7 (175)	No	4.2 (1.91)	8 (226)	22 (623)	97.3/110.3	1/4	3/8 (10)	5/8-11
IR315	Heavy Duty	3,000[a]	N/A	2 3/4x17 1/2 (70 x 455)[b]	No	6.6 (2.99)	8 (226)	9 (255)	93.3/106.3	1/4	3/8 (10)	N/A
IR317	Heavy Duty	18,000	N/A	5 (125)	No	2.3 (1.04)	12 (340)	25 (708)	96.5/109.5	1/4	3/8 (10)	N/A
IR318	Heavy Duty	2,800	N/A	7 (175)	No	4.5 (2.04)	6 (170)	21 (595)	90.5/103.5	1/4	3/8 (10)	5/8-11

[a] 1" Length Strokes (per min)
[b] Rectangular Pad Size

Air Finishing Tools

IR319

Heavy Duty

Air Vertical Sander – 7" Pad

A high quality sander made to handle demanding jobs like rust removal and sanding metal and body filler, the IR319 comes complete with one 7" backing pad.

- Longer gear life plus better gearing for better power
- Planetary gear reduction feature
- Lever throttle for speed control
- Handle exhaust directs air away from work area

IR327

Heavy Duty

Air High-Speed Tire Buffer

With a free speed up to 22,000 rpm and powerful 1/2- hp motor, the IR327 will make quick work of patchwork and roughing up low areas for recapping, tire scuffing and cleaning tire moldings.

- Lever throttle for easy operation
- Rear exhaust keeps air away from you and your work

IR327LS

Heavy Duty

Air High-Speed Tire Buffer

Designed for conveniences, the many features of the IR327LS make it the ideal tool for every tire shop. The quick change chuck, built-in regulator and lever-style throttle make patchwork, roughing areas for recapping and cleaning tire moldings a breeze.

- Lever-style tease trigger with lock-off for easy operation and protection against accidental start-up
- Quick change chuck for easy buffing wheel change
- Piped-away exhaust (included) directs air away from work area and operator
- Convenient hanger-keeps tool within easy reach

IR328B

Heavy Duty

Air Geared Orbital Sander – 8" Pad

The smooth strength and power of this air geared orbital sander lets you remove heavy material and body filler on large, flat surfaces leaving a clean, swirl-free finish.

- Dual action pad motion (5/32" orbit)
- A long-life, vibration-free performance
- Balanced ball bearing construction

Model Number	Performance Rating	Free Speed (rpm)	Rated Power hp (kW)	Pad Diameter in. (mm)	Vacuum Ready	Weight lbs. (kg)	Average Air Consumption cfm (l/min.)	@ Load cfm (l/min.)	Sound dBA (Pressure/ Power)	Air Inlet in.	Min. Hose Size in. (mm)	Spindle in.
IR319	Heavy Duty	5,000	N/A	7 (175)	No	4.5 (2.09)	6 (170)	20 (566)	90.8/103.8	1/4	3/8 (10)	5/8-11
IR327	Heavy Duty	22,000	.5 (.38)	3/8 (10)[C]	No	1.6 (.73)	15 (425)	28 (793)	90.9/103.9	1/4	3/8 (10)	3/8 (10)[C]
IR327LS	Heavy Duty	3,000	.5 (.37)	3/8 (10)[C]	No	1.13 (.51)	14 (396)	27 (756)	95/108	1/4	3/8 (10)	3/8 (10)[C]
IR328B	Heavy Duty	825	.25	8 (203)	No	4.7 (2.13)	4 (113)	16 (453)	90.45/93.7	1/4	3/8 (10)	N/A

[C] *Chuck Size*

IR4151

Ultra Duty

Vacuum-Ready Air Random Orbital Sander

This vacuum-ready, low vibration model produces an ultra-high quality finish and connects easily to central or portable vacuum systems. Combining the IR4151 with the IR4151JV Jet-Vac conversion kit makes this tool a self-generated vacuum sander, producing twice the vacuum power of the nearest competitor. The IR4151 extracts dust and particles through and around the pad keeping foreign matter away from the motor. The vacuum sanding pad features a unique design and large 1/2" diameter holes for efficient operation. Virtually all dust is instantly channeled away from the work.

- 12,000 rpm free speed for swirl-free finishes
- Durable, lightweight composite design weighs less than 2 lbs.
- Interchangeable grip rings available to match operator hand sizes

IR4151-2

Ultra Duty

Vacuum-Ready Two-Handed Random Orbital Sander

The extra long handle and high speed/low vibration performance of the IR4151-2 combine to provide superior control and flawless finishes for technicians who prefer two-handed sanding. It coverts easily to vacuum operation, and incorporates all of the other features that make the 4151 Series one of the most advanced range of tools available for quality-critical paint and body work.

IR4151-5

Ultra Duty

Vacuum-Ready Random Orbital Sander

Same specifications as the IR4151 model, but with a 5" pad size.

IR4151-HL

Ultra Duty

Random Orbital Sander

Same specifications as the IR4151 model, but with a Hook & Loop style pad.

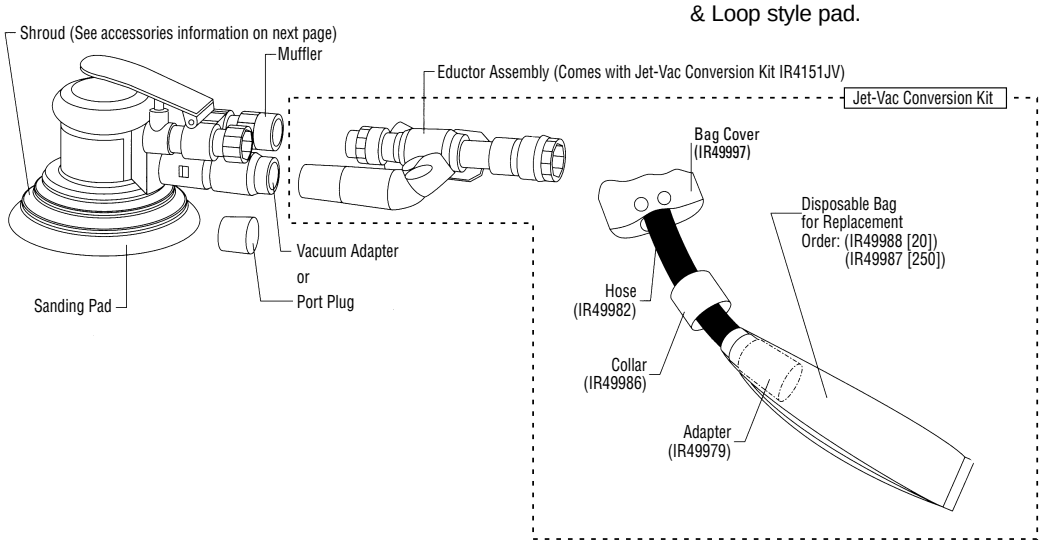

Model Number	Performance Rating	Free Speed (rpm)	Rated Power hp (kW)	Pad Diameter in. (mm)	Vacuum Ready	Weight lbs. (kg)	Average Air Consumption cfm (l/min.)	@ Load cfm (l/min.)	Sound dBA (Pressure/ Power)	Air Inlet in.	Min. Hose Size in. (mm)	Spindle in.
IR4151	Ultra Duty	12,000	.20 (.15)	6 (152)	Yes	1.92 (.87)	8 (226)	15.5 (440)	78/91	1/4	5/16 (8)	N/A
IR4151-2	Ultra Duty	12,000	.20 (.15)	6 (152)	Yes	1.92 (.87)	8 (226)	15.5 (440)	78/91	1/4	5/16 (8)	N/A
IR4151-5	Ultra Duty	12,000	.20 (.15)	6 (152)	Yes	1.92 (.87)	8 (226)	15.5 (440)	78/91	1/4	5/16 (8)	N/A
IR4151-HL	Ultra Duty	12,000	.20 (.15)	6 (152)	No	1.92 (.87)	8 (226)	15.5 (440)	78/91	1/4	5/16 (8)	N/A

Air Finishing Tools Accessories

IR4100 Series Major Components and Accessories

Premium Quality Low-Profile Pads

Non-Vac, 3/8" (9.5mm) thick

6" Vinyl	IR49879-1
6" Duck	IR49880-1
5" Vinyl	49094-1
5" Duck	IR49877-1

Vacuum, 3/8" (9.5mm) thick
(6" petal pattern provided with every sander)

6" Petal Pattern	49099-1
6" Hook and Loop	49694
5" Petal Pattern	IR49096-1

Grip Rings
("large" ring provided with every sander)

Gray (small)	IR49801
Black (medium)	49798
Blue (large)	IR49799

Vacuum Adapters – 3154

Port Adapter	49802

Shrouds

Short	
(Standard on 4151)	IR48266-1
Long	48878

Jet-Vac Vacuum Bags

Jet-Vac Dust Collection Bag (External)	49997
20 Quantity Pack (Disposable)	IR49988
250 Quantity Pack (Disposable)	IR49987

Jet-Vac Conversion Kit

6" Pad	4151JV

Includes:

Part No.	*Description*	*Quantity*
48878	6" shroud	1
49973	Disposable bag	3
49997	Cloth bag cover	1
49976	Eductor assembly	1
49979	Bag adapter	1
49982	Hose	1
49986	Collar	1

Service Kit
(for preventative maintenance)

IR49837 Pad Wrench (included with every tool)	354-69

Spanner Wrenches

Use to remove the lock ring securing the motor assembly	44548

The full range of Ingersoll-Rand sanding, backing, and polishing pads will help you do every sanding, polishing, and grinding job to your satisfaction.

315-39 Straight Line Sanding Pad

For use with IR315. Non-metallic material reduces side strap wear caused by metallic sanding pads. Fits other similar brands of straight-line sanders.

6135A Polishing Pad

8" diameter, 2" thick polyester foam. For use with IR314, IR318 or any polisher with a 5/8"-11 spindle.

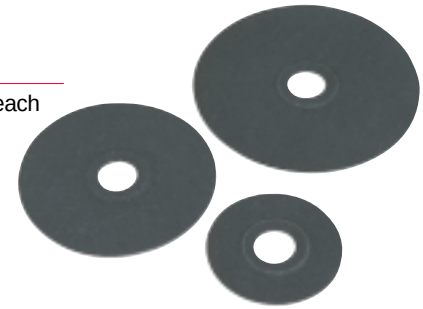

317-825 Backing Pads

For use with IR317, one each 3", 4", 5" backing pads.

For IR313, IR314, IR318, and IR319

Cat. No.	*Dia.*	*Description*
Standard Duty		
313-825-7	7"	Rigid backing pad
Heavy Duty		
6130A	7"	Flexible backing pad

Dual Action Backing Pad for IR310 and IR311

Standard Duty		
310-825-6	6"	Firm pad for medium to heavy stock removal, cloth backed
311A-825-6	6"	Vinyl pad
Heavy Duty		
6120A	6"	Firm edge for firm support, cloth backed
6121A	6"	Soft edge for medium support, cloth backed
6122A	5"	Firm edge for firm support, cloth backed
6123A	5"	Soft edge for medium support, cloth backed

Dual Action Backing Pad for IR328

Standard Duty		
328A-826	8"	Pad assembly

Air Drills/Screwdrivers

An air drill's chuck does most of the work. That's why all Ingersoll-Rand air drills are engineered with high quality chucks that resist wear and tear. Our new super duty air drills, the 3/8" IR7811, and the 1/2" IR7816, have industrial grade chucks and keyless chuck versions that are extra tough for drilling, sawing, valve guide reaming, cylinder honing, and wire brushing. They are more powerful, efficient, and durable than previous models, with smooth, quiet operation.

Now we've also added reversible models, like the IR7811R, IR7811RKC, IR7816R, and IR7816RKC, for added convenience and control.

Air Drills/Screwdrivers

The complete line includes 3/8" and 1/2" air drills. Reversible drills in each size make it easy to back out tight screws. With free speeds of 2100 rpm, several 3/8" air drills make fast work of driving and removing screws. The 1/2" air drills run at a free speed of 500-950 rpm to deliver the higher power you need for heavy drilling. The IR7804R and IR7807R models provide extra convenience with angle head configurations. All are compact and lightweight for easy handling. Their variable speed throttles make Ingersoll-Rand air drills easy to start holes and maintain control as you work. In addition, we also offer the IR371 screwdriver for a variety of soft-draw automotive applications.

Model Number	Performance Rating	Free Speed (rpm)	Chuck Size in. (mm)	Rated Power hp (kW)	Net Weight lbs. (kg)	Overall Length in. (mm)	Average Air Consumption cfm (l/min.)	@ Load cfm (l/min.)	Sound dBA (Pressure/ Power)	Air Inlet in.	Min. Hose Size in. (mm)
IR371	Standard Duty	1,800	1/4 Hex	.44 (.33)	2.54 (1.15)	7.4 (188)	4 (113)	29 (825)	78/91	1/4	3/8 (10)
IR7802	Heavy Duty	2,500	3/8 (10)	.5 (.38)	2.4 (1.09)	7.8 (198)	4 (113)	20 (556)	90.1/103.1	1/4	3/8 (10)
IR7802R	Heavy Duty	2,000	3/8 (10)	.5 (.38)	2.5 (1.13)	6.4 (163)	4 (113)	26 (736)	92.8/105.8	1/4	3/8 (10)
IR7803	Heavy Duty	500	1/2 (13)	.5 (.38)	3.2 (1.45)	9 (229)	4 (113)	21 (595)	88.8/101.8	1/4	3/8 (10)
IR7803R	Heavy Duty	400	1/2 (13)	.5 (.38)	3.3 (1.50)	8.7 (221)	4 (113)	27 (764)	92.9/105.9	1/4	3/8 (10)
IR7804R	Super Duty	1,200	3/8 (10)	.5 (.38)	2.7 (1.22)	8.4 (213)	4 (113)	15 (425)	91.4/104.4	1/4	3/8 (10)
IR7811	Super Duty	2,750	3/8 (10)	.5 (.37)	2.7 (1.22)	7.4 (188)	4 (113)	23 (651)	77.8/90.8	1/4	3/8 (10)
IR7811R	Super Duty	2,750	3/8 (10)	.5 (.37)	2.7 (1.22)	7.4 (188)	4 (113)	23 (651)	77.8/90.8	1/4	3/8 (10)
IR7811KC	Super Duty	2,100	3/8 (10)	.5 (.38)	2.7 (1.22)	7.4 (188)	4 (113)	29 (825)	77.8/90.8	1/4	3/8 (10)
IR7811RKC	Super Duty	2,100	3/8 (10)	.5 (.38)	2.7 (1.22)	7.4 (188)	4 (113)	29 (825)	77.8/90.8	1/4	3/8 (10)
IR7807R	Standard Duty	1,800	3/8 (10)	.33 (.25)	2.47 (1.12)	8.1 (206)	4 (113)	17 (485)	89/102	1/4	3/8 (10)
IR7816	Super Duty	1,200	1/2 (13)	.5 (.37)	3.2 (1.45)	8 (203)	4 (113)	22 (623)	80.2/93.2	1/4	3/8 (10)
IR7816R	Super Duty	1,200	1/2 (13)	.5 (.37)	3.2 (1.45)	8 (203)	4 (113)	22 (623)	80.2/93.2	1/4	3/8 (10)
IR7816KC	Super Duty	950	1/2 (13)	.5 (.38)	3.2 (1.45)	8 (203)	5 (142)	22 (623)	80.2/93.2	1/4	3/8 (10)
IR7816RKC	Super Duty	950	1/2 (13)	.5 (.38)	3.2 (1.45)	8 (203)	5 (142)	22 (623)	80.2/93.2	1/4	3/8 (10)

NOTE: KC Denotes Keyless Chuck models.
R Denotes reversible models.
All Pistol Grip Drills are available with Jacobs® Keyless Chucks.
When ordering this option, place "KC" at the end of the part number, ie: 7802KC.

IR371

Standard Duty

Pistol-Grip Reversible Screwdriver

One in a new family of economical standard duty tools, the IR371 is an excellent choice for soft-draw applications. This tool is well-suited for service work on HVAC systems, instrument panels, and trim components. It delivers reliable performance for driving of sheet metal, self tapping, and wood screws.

- Positive action clutch, for full torque throughout rundown
- Convenient one-handed operation, with reverse control at trigger
- Variable speed throttle for easy starts
- Through-handle exhaust
- Compact, lightweight and maneuverable

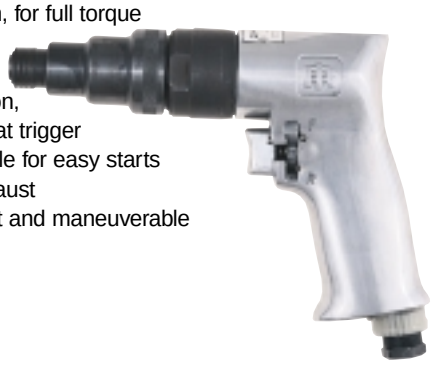

IR7802

3/8" Heavy Duty

Air Drill

With its industrial grade 3/8" chuck, this economical choice includes high quality features for general drilling and hole sawing jobs. The planetary gear reduction balances the load on bearings and gears for increased tool life.

- Variable speed throttle
- Lightweight, compact drill
- Handles smoothly

IR7811

3/8" Super Duty

Air Drill

More powerful, more durable and more efficient than its predecessors.

- The IR7811 exceeds its nearest competitor in speed by 350 rpm
- Requires less air to deliver more power. Generates a higher free speed and consumes less air while reducing noise at 15% below the nearest competitor
- The new palm-swelled handle and contoured professional trigger provide greater comfort and control

IR7811R

3/8" Super Duty

Air Reversible Drill

Same features and specifications as the IR7811, but with a convenient reverse mode with trigger-mounted control.

IR7811KC

3/8" Super Duty

Air Drill/Keyless Chuck

Same specifictions as the IR7811 model, but with keyless chuck for fast and easy bit changing.

IR7811RKC

3/8" Super Duty

Air Drill/Keyless Chuck

Same features and specifications as the IR7811RKC, but with a convenient reverse mode with trigger-mounted control.

Model Number	Performance Rating	Free Speed (rpm)	Chuck Size in. (mm)	Rated Power hp (kW)	Net Weight lbs. (kg)	Overall Length in. (mm)	Average Air Consumption cfm (l/min.)	@ Load cfm (l/min.)	Sound dBA (Pressure/ Power)	Air Inlet in.	Min. Hose Size in. (mm)
IR371	Standard Duty	1,800	1/4 Hex	.44 (.33)	2.54 (1.15)	7.4 (188)	4 (113)	29 (825)	78/91	1/4	3/8 (10)
IR7802	Heavy Duty	2,500	3/8 (10)	.5 (.38)	2.4 (1.09)	7.8 (198)	4 (113)	20 (556)	90.1/103.1	1/4	3/8 (10)
IR7811	Super Duty	2,750	3/8 (10)	.5 (.37)	2.7 (1.22)	7.4 (188)	4 (113)	23 (651)	77.8/90.8	1/4	3/8 (10)
IR7811R	Super Duty	2,750	3/8 (10)	.5 (.37)	2.7 (1.22)	7.4 (188)	4 (113)	23 (651)	77.8/90.8	1/4	3/8 (10)
IR7811KC	Super Duty	2,100	3/8 (10)	.5 (.38)	2.7 (1.22)	7.4 (188)	4 (113)	29 (825)	77.8/90.8	1/4	3/8 (10)
IR7811RKC	Super Duty	2,100	3/8 (10)	.5 (.38)	2.7 (1.22)	7.4 (188)	4 (113)	29 (825)	77.8/90.8	1/4	3/8 (10)

Air Drills/Screwdrivers

IR7802R

3/8" Heavy Duty

Air Reversible Drill

Use this economical, high quality 3/8" drill for all your general purpose drilling, honing, reaming, and hole sawing. With its reversible 1/2 hp motor, you can also drive and remove screws, including backing out tight screws without a struggle.

- Reversible motor with a quick reverse lever
- Variable speed throttle for starting holes easily
- Handles smoothly, a lightweight, compact drill

IR7803

1/2" Heavy Duty

Air Drill

Here's the economical choice for power, a high quality air drill designed for drilling, hole sawing, cylinder honing, and any other job that calls for a 1/2" size. Its quality features for long life, include the industrial grade 1/2" chuck, ball and needle bearing construction, and double reduction planetary gearing.

- No-load speed of 500 rpm
- Auxiliary side handle

IR7803R

1/2" Heavy Duty

Air Reversible Drill

A powerful choice for drilling, honing, reaming, and hole sawing, this drill has extra advantages. The reversible motor lets you drive and remove screws too. Even the tightest screws back out with ease under the force of the 1/2 hp motor.

- Quick reverse lever
- Variable speed throttle
- Heavy duty ball and needle bearing
- More power and long tool life
- Planetary gear reduction balances the load

IR7804R

3/8" Super Duty

Air Angle Reversible Drill

This premium quality drill provides the convenience of an angle head for working in confined areas. Variable speed lever throttle adds precision for all applications.

- Rear exhaust keeps exhaust air away from the work area
- Forward/reverse control locks in both positions
- Plenty of power and torque, with 1/2 hp motor and 1,200 rpm free speed

Model Number	Performance Rating	Free Speed (rpm)	Chuck Size in. (mm)	Rated Power hp (kW)	Net Weight lbs. (kg)	Overall Length in. (mm)	Average Air Consumption cfm (l/min.)	@ Load cfm (l/min.)	Sound dBA (Pressure/ Power)	Air Inlet in.	Min. Hose Size in. (mm)
IR7802R	Heavy Duty	2,000	3/8 (10)	.5 (.38)	2.5 (1.13)	6.4 (163)	4 (113)	26 (736)	92.8/105.8	1/4	3/8 (10)
IR7803	Heavy Duty	500	1/2 (13)	.5 (.38)	3.2 (1.45)	9 (229)	4 (113)	21 (595)	88.8/101.8	1/4	3/8 (10)
IR7803R	Heavy Duty	400	1/2 (13)	.5 (.38)	3.3 (1.50)	8.7 (221)	4 (113)	27 (764)	92.9/105.9	1/4	3/8 (10)
IR7804R	Super Duty	1,200	3/8 (10)	.5 (.38)	2.7 (1.22)	8.4 (213)	4 (113)	15 (425)	91.4/104.4	1/4	3/8 (10)

IR7807R

3/8" Standard Duty

Air Angle Reversible Drill

One in a new family of economical, standard duty tools, the IR7807R is an excellent choice for service work requiring a compact, low profile angle head. It's a durable, reliable tool for drilling in all types of materials, including sheet metal, wood, and composites.

- Durable Jacobs multi-craft chuck
- Reversible, with convenient control
- Comfortable lever throttle
- Grease plug for easy preventative maintenance
- Precision machine gearing ensures maximum power transfer and durability

IR7816

1/2" Super Duty

Air Drill

More powerful, more durable and more efficient than its predecessors.

- The IR7816, with a free speed of 1,200 rpm, is significantly faster than its nearest competitor
- Requires less air to deliver more power. Generates a higher free speed and consumes less air while reducing noise at 15% below the nearest competitor
- The new palm-swelled handle and contoured professional trigger provide greater comfort and control

IR7816R

1/2" Super Duty

Air Reversible Drill

Same features and specifications as the IR7816, but with a convenient reverse mode with trigger-mounted control.

IR7816KC

1/2" Super Duty

Keyless Chuck

Same specifications as the IR7816 model, but with keyless chuck for fast and easy bit changing.

IR7816RKC

1/2" Super Duty

Air Reversible Drill/Keyless Chuck

Same features and specifications as the IR7816KC, but with a convenient reverse mode with trigger-mounted control.

Model Number	Performance Rating	Free Speed (rpm)	Chuck Size in. (mm)	Rated Power hp (kW)	Net Weight lbs. (kg)	Overall Length in. (mm)	Average Air Consumption cfm (l/min.)	@ Load cfm (l/min.)	Sound dBA (Pressure/ Power)	Air Inlet in.	Min. Hose Size in. (mm)
R7807R	Standard Duty	1,800	3/8 (10)	.33 (.25)	2.47 (1.12)	8.1 (206)	4 (113)	17 (485)	89/102	1/4	3/8 (10)
IR7816	Standard Duty	1,200	1/2 (13)	.5 (.37)	3.2 (1.45)	8 (203)	4 (113)	22 (623)	80.2/93.2	1/4	3/8 (10)
IR7816R	Standard Duty	1,200	1/2 (13)	.5 (.37)	3.2 (1.45)	8 (203)	4 (113)	22 (623)	80.2/93.2	1/4	3/8 (10)
IR7816KC	Super Duty	950	1/2 (13)	.5 (.38)	3.2 (1.45)	8 (203)	5 (142)	22 (623)	80.2/93.2	1/4	3/8 (10)
IR7816RKC	Super Duty	950	1/2 (13)	.5 (.38)	3.2 (1.45)	8 (203)	5 (142)	22 (623)	80.2/93.2	1/4	3/8 (10)

Air Drills/Screwdrivers Accessories

Designed specifically to match your Ingersoll-Rand air drills and saws, these are high quality parts constructed for great strength and durability.

Replacement Chucks and Chuck Keys

Capacity	*Cat. No. (boxed)*	*Thread*	*Chuck Key Cat. No.*	*Tool No.*
3/8" (10 mm)	728-99-KC5	3/8"x24	(keyless)	7801, 7802, 7802R
3/8" (10 mm)	7801-99-6	3/8"x24	728N-253	7801
3/8" (10 mm)	7802-99	3/8"x24	R000B2J70-J253	7802, 7802R
1/2" (13 mm)	728-99-KC8		(keyless)	7806, 7803, 7803R
1/2" (13 mm)	7803-99	3/8"x24	7803-253	7803, 7803R
1/2" (13 mm)	7806-99-8	3/8"x24	728N-253	7806

Saw Blades

High speed, flexible, heat treated saw blades for use with IR 329.

Cat. No.	*Quantity*	*Description*
329-F500	6	Fine 32 teeth/inch (red)
329-C500	6	Coarse 24 teeth/inch (gray)

Broken Bolt? The answer is…Drill-Out® Power Extractor

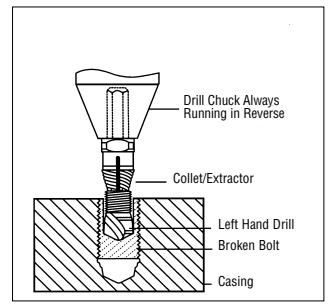

Step 1: Drilling

Choose the correct size DRILL-OUT. Place the DRILL-OUT into a 3/8" reversible variable speed drill, thread the collet back to the chuck and drill on a centered hole to a depth just before extractor engagement (3/8" – 1/2").

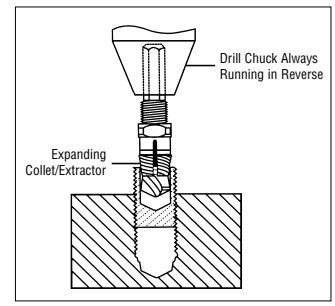

Step 2: Extracting

Turn the collet five (5) turns from chuck. Bring the drill up to the recommended RPM speed and plunge the DRILL-OUT into the hole. The collet will engage the broken bolt and extract it.

Ordering Information

Drill-Out Size	*Part Number*
1/4 (6 mm)	DO-1/4
5/16 (8 mm)	DO-5/16
3/8 (10 mm)	DO-3/8
1/2 (13 mm)	DO-1/2
4 piece kit	DO-4C

Air Compressors

Putting Air to Work

For over 65 years, Ingersoll-Rand has been the world leader in air compressors and air system accessories. We understand the needs and requirements for air systems and the business demands that are faced every day. Increasing energy costs and reduced margins require increased reliability and efficiency from not only your air compressor, but your entire air system.

Simply stated, your air system is much more than an air compressor. It's the complete system – the piping, filters, dryers, drains, hoses, valves and point-of-use tools. And it all needs to work at peak efficiency with the quality and reliability to get the job done.

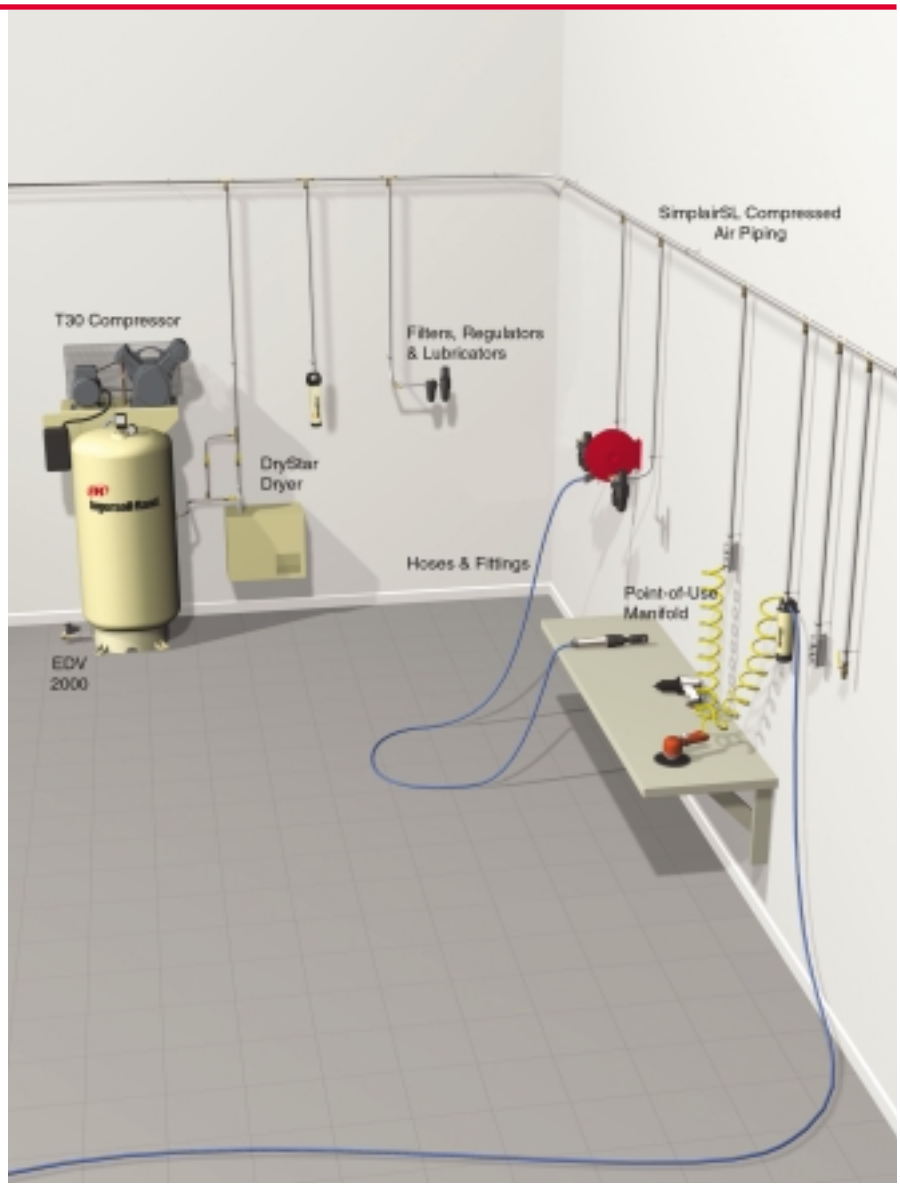

Questions to Answer

What will compressed air be used for?
The type of work being performed is probably the most important factor in selecting a compressor.

Where will compressor be located?
Indoors: heated environment to prevent air lines from freezing while providing sufficient ventilation to cool compressor where elevated temperatures may exist. Outdoors: protection against ambient environment and provisions for cold-weather starting.

How much pressure (psi) is needed?
Compressor discharge pressure (psi: pounds per square inch) must exceed the psi requirement of all pneumatic tools or equipment being operated.

How much air flow (cfm) is needed?
CFM (cubic feet per minute) is the measure of air flow the compressor can create. CFM is stated in two different forms: piston displacement (PD) or actual cubic feet per minute (ACFM). Always consider ACFM, as it reflects the amount of useable compressed air.

What horsepower is required?
Horsepower is directly proportional to the cfm rating of the compressor. The higher the horsepower, the more air (cfm) the compressor can deliver. Do not rely solely on horsepower when specifying or selecting an air compressor.

What type and size tank is needed?
The tank provides a reserve of air to meet peak flow and pressure demands. The larger the receiver, the more reserve available. Tanks are available in vertical and horizontal designs; configuration is dependent upon available floor space.

What are the electrical requirements?
Identify available incoming electrical service before specifying an air compressor. ***Always have a qualified electrician review electrical requirements.***

Know Your Power Source

All residential and commercial buildings have 115V/60Hz power.

Many residential, commercial and industrial buildings have 230V/single phase/60Hz power, but this should be confirmed. When electric power is not available, select a gas engine driven compressor. Do not use a gas engine compressor indoors.

Reciprocating Air Compressors

When you select an Ingersoll-Rand reciprocating air compressor, you've chosen a compressor that is world renowned for its quality and reliability. Engineered for high-performance, reliability and efficiency, Ingersoll-Rand reciprocating compressors provide easy operation, low maintenance, and a 100% duty cycle for a reliable air supply.

Single- and Two-Stage Air Compressors

Single-Stage:

Single-stage models compress air to a final pressure in one stroke. They generally are used for pressures between 70 PSI and 90 PSI (maximum pressure to 135 PSI).

Ingersoll-Rand Single-Stage Design

- Oversized belt wheel provides reliable design and cooler operation
- Durable cast-iron cylinders, heads and frame are designed for continuous operation and extended pump life
- Extended service intervals – IR synthetic lubricant provides 2,000-hour oil change intervals (four times longer than mineral based lubricants)
- High-efficiency stainless steel finger valves are simple, efficient and easy to maintain
- Manual thermal overload protection of the motor. No starter required
- Sight glass makes it easy to check oil level
- Provides 135 PSI operation

Two-Stage:

A two-stage model (1) compresses air to an intermediate pressure in the first stage, (2) removes heat of compression through an intercooler, and (3) compresses air to a final pressure in a second compression stage.

Two-stage compressors are more efficient and are generally used for pressures above 100 PSI (maximum pressure to 175 PSI).

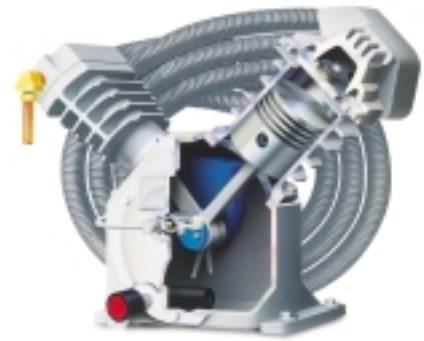

V Cylinder configuration

Ingersoll-Rand Two-Stage Design

- Removable cylinders are easy to repair, provide even, 360º cooling and eliminate hot spots
- Durable cast-iron cylinders, heads and frame are designed for continuous operation and extended pump life
- Overhung crankshaft is precision-balanced to run smoothly and quietly
- One-piece connecting rod has fewer wearing parts
- Finned copper intercooler runs cool in even the most demanding conditions
- Splash lubrication is simple, reliable, and does not require an oil pump, making it inexpensive and easy to maintain
- Provides 175 PSI operation

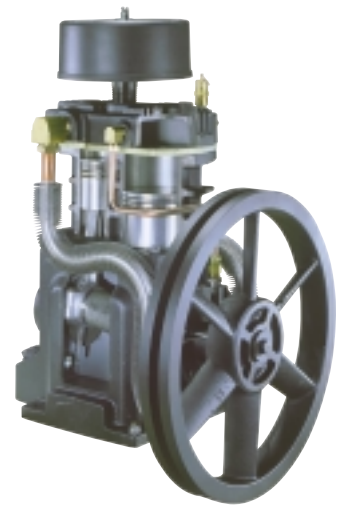

Enblock cylinder configuration

Single Stage Air Compressors

Twin Stack

The Ingersoll-Rand Twin Stack hand-carry air compressor is designed to provide power, durability and portability on the job site. Built to last, this oil-lube compressor with durable cast-iron cylinders is designed for 100% continuous duty applications. The Twin Stack includes a 1/4-inch universal coupler, conveniently mounted regulator and pressure gauge, 4.5-gallon twin tanks, All Season Select lubricant and a power cord.

- Lightweight and compact hand-carry size
- Durable cast-iron construction
- Extended pump life – double the life of similar oil-free products

DD2T2

Electric-Driven Single-Stage

Our Single-Stage electric air compressors are ideal for most anyone from the do-it-yourselfer, to the professional air compressor user. Each compressor features durable cast-iron construction, 100% continuous duty cycle for the toughest applications and extended pump life for years of trouble-free service.

- Industrial quality design
- Durable cast-iron construction
- 135 PSI maximum operating pressure

SS5L5

SS3L3

Garage Mate

Designed for professionals and serious do-it-yourselfers, the versatile Garage Mate is ideal for the home, shop or job site. Delivering maximum air, the Garage Mate can power a variety of tools. it features a cast-iron, oil-lubricated pump for solid, reliable performance. Belt-driven for quiet operation, all models are equipped with a pressure switch, pressure gauge, regulator, safety valve, manual drain and six-foot power cord.

- 100% continuous duty for tough applications
- Durable cast-iron construction
- Quiet operation: 75-80dBA

SS3F2-GM

SS3R2-GM

Single Stage Units

Model Number	Peak HP	Running HP	Voltage	Tank	ACFM @ 90 PSI	Max PSI	NPT Outlet (in)	Package Dimensions LxWxH (in)	Net Weight (lbs)
DD2T2	2	N/A	115-1-60	4.5-gal twin	4.4	125	3/8	21 x 15 x 17	58
SS3R2-GM	5	2	115-1-60	24-gal vert	5.7	135	3/8	23 x 25 x 51	185
SS3F2-GM	5	2	115-1-60	30-gal hor	5.7	135	3/8	46 x 25 x 35	185
SS3L3	7.9	3	230-1-60	60-gal vert	11.3	135	3/8	20 x 23 x 66	300
SS5L5	11.8	5	230-1-60	60-gal vert	18.1	135	1/2	20 x 30 x 71	310

Single Stage Air Compressors

Wheelbarrow

Ingersoll-Rand electric and gas engine driven Wheelbarrow air compressors are lightweight with a low-profile design providing maximum maneuverability. Built to last, these cast-iron, oil-lube compressors are designed for 100% continuous duty applications. Includes pressure switch, regulator and gauge, two quick disconnects to power multiple tools and twin 8-gallon capacity tanks. Electric model features a belt drive to provide quiet operation (76dBA), a six-foot power cord and dual voltage (2 HP model only). Where electric power is not readily available, the gas-driven model is powered by either a 5.5 HP Honda or Briggs & Stratton high-performance engine.

SS3J5.5GH-WB

- Designed for maximum maneuverability on the job site
- Durable cast-iron construction
- 100% continuous duty for tough applications
- Includes two quick disconnects to power multiple tools

Air Sled

Ingersoll-Rand electric and gas engine driven Air Sled compressors feature a rugged frame support to meet the rigorous demands of field handling. Base package includes pressure gauge, manual drain, two quick disconnects to power multiple tools and twin 8-gallon capacity tanks. Electric model is belt-driven to provide quiet operation (76dBA) and includes a six-foot power cord. The gas-driven model is powered by a premium Honda engine. Available options include regulation panel, cart assembly, hose rack and weatherproof cover.

- Ergonomically designed with rugged frame support to meet the rigorous demands of field handling
- Durable cast-iron construction; oil lube
- Two quick disconnects to power multiple tools

2340S9GH-AS

Single Stage Units

Model Number	Peak HP	Running HP	Voltage	Tank	ACFM @ 90 PSI	Max PSI	NPT Outlet (in)	Package Dimensions LxWxH (in)	Net Weight (lbs)
Electric									
SS3J2-WB	5	2	115/230-1-60	8-gal twin	5.7	135	3/8	43 x 18 x 25	175
SS3J3-WB	7.9	3	230-1-60	8-gal twin	11.3	135	3/8	43 x 18 x 25	175

Model Number	Compressor Pump	HP	Voltage	Tank	ACFM @ 90 PSI	Max PSI	Package NPT Outlet (in)	Net Dimensions LxWxH (in)	Weight (lbs)
SS3J3-AS	Single-Stage	3	230-1-60	8-gal twin	11.3	135	3/8	38 x 18 x 26	174

Model Number	Running HP	Engine	Tank	ACFM @ 90 PSI	Max PSI	Package NPT Outlet (in)	Net Dimensions LxWxH (in)	Weight (lbs)
Gas Driven								
SS3J5.5GB-WB	5.5	Briggs & Stratton	8-gal twin	11.8	135	3/8	43 x 18 x 25	175
SS3J5.5GH-WB	5.5	Honda	8-gal twin	11.8	135	3/8	43 x 18 x 25	175

Model Number	Compressor Pump	HP	Engine	Tank	ACFM @ 90 PSI	Max PSI	NPT Outlet (in)	Package Dimensions LxWxH (in)	Net Weight (lbs)
SS3J5.5GH-AS	Single-Stage	5.5	Honda	8-gal twin	11.8	135	3/8	38 x 19 x 27	177
2340S9GH-AS*	Two-Stage	9	Honda	8-gal twin	14.3	175	1/2	42 x 21 x 32	312

AS = Air Sled WB = Wheelbarrow

Two Stage Air Compressors

Type-30 Truck Mount

Two-Stage Gasoline Engine Driven

Ingersoll-Rand Type-30 F-Series Two-Stage compressors meet the needs of fleet or field service applications. Featuring truck-bed mounting, the F-Series includes electronic ignition, idle engine control, a 30-gallon ASME receiver, an OSHA approved, fully enclosed belt guard and a weather-resistant powder-coat paint finish.

- Durable cast-iron construction
- 175 PSI maximum operating pressure
- Extended pump life
- 100% duty cycle for tough applications

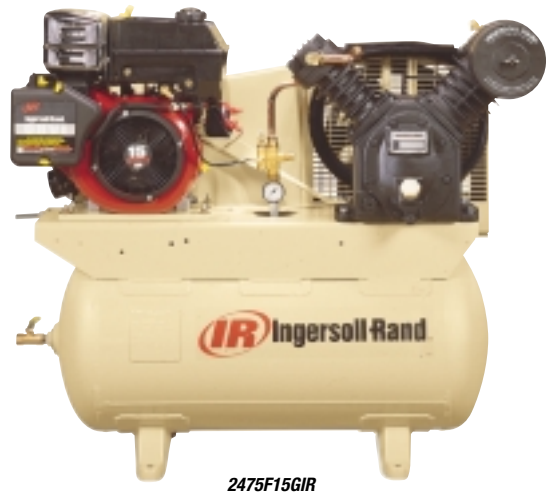

2475F15GIR

2475F11GH

2475F12.5G

Model Number	Running HP	Engine	Tank	ACFM @ 175 PSI	Max PSI	NPT Outlet (in)	Package Dimensions LxWxH (in)	Net Weight (lbs)
2475F11GH	11	Honda with Alternator	30-gal hor	19	175	3/4	44 x 22 x 41	415
2475F11.5GKA	11.5	Kawasaki	30-gal hor	25	175	3/4	67 x 22 x 39	380
2475F11.5GKA/Alt	11.5	Kawasaki with Alternator	30-gal hor	25	175	3/4	67 x 22 x 39	380
2475F12.5G	12.5	Kohler	30-gal hor	24	175	3/4	44 x 22 x 48	429
2475F12.5G/Alt	12.5	Kohler with Alternator	30-gal hor	24	175	3/4	44 x 22 x 48	429
2475F15GIR	15	IR	30-gal hor	24	175	3/4	47 x 21 x 42	485
2475F15GIR	15	IR with Alternator	30-gal hor	24	175	3/4	47 x 21 x 42	485

Two Stage Air Compressors

Electric-Driven Two-Stage – Type-30 Series Value Packaged

Designed for heavy duty shop use, Ingersoll-Rand Two-Stage electric air compressors provide the quality and performance required by automotive service and body shops; fleet maintenance; machine shops; production and manufacturing lines; car washes; maintenance/repair shops and farms.

Economically priced, Ingersoll-Rand Two-Stage Value Packaged air compressors are perfect for automotive, commercial or light industrial applications where a dependable air supply is required. The value package includes the added features of a mounted and wired starter, automatic start/stop pressure switch control, oil sight glass and ASME coded tank.

- Durable cast-iron, two-stage design offers extended pump life for years of trouble-free service
- 175 PSI maximum operating pressure
- 100% continuous duty for tough applications
- Automatic start/stop control/pressure switch operation
- Includes motor starter, oil sight glass (10-15 HP only), manual drain and ASME tank

7100E15V

Electric-Driven Two-Stage – Type-30 Series Fully Packaged

Ingersoll-Rand high-performance Two-Stage Fully Packaged air compressors are designed for the most demanding automotive, heavy-duty commercial or industrial applications where a dependable air supply is essential. Each Fully Packaged air compressor comes complete with a pre-installed magnetic motor starter, air-cooled aftercooler, and an electric drain valve to remove harmful moisture, plus the added protection of a low oil level shutdown switch.

- Durable cast-iron, two-stage design offers extended pump life for years of trouble-free service
- 175 PSI maximum operating pressure
- 100% continuous duty for tough applications
- Includes magnetic motor starter, air-cooled aftercooler, electronic drain valve, low oil level shutdown switch and ASME tank

2475N7.5 FP

Model Number	HP	Tank	ACFM @ 175 PSI	Max PSI	NPT Outlet (in)	Package Dimensions LxWxH (in)	Net Weight (lbs)
TS5D5 (FP)	5	80-gal hor	17.0	175	1/2	68 x 20 x 45	450
TS5N5 (FP)	5	80-gal vert	17.0	175	1/2	26 x 31 x 73	450
2340L5	5	60-gal vert	14.7	175	1/2	20 x 33 x 69	400
2340N5	5	80-gal vert	14.7	175	1/2	22 x 36 x 69	475
2475N5 (FP)	5	80-gal vert	16.8	175	3/4	26 x 38 x 70	500
2475N7.5 (FP)	7.5	80-gal vert	24.3	175	3/4	26 x 38 x 70	500
2545E10V (FP)	10	120-gal hor	35	175	3/4	73 x 28 x 51	835
2545K10 (FP)	10	120-gal vert	35	175	3/4	32 x 44 x 82	850
7100E15V (FP)	15	120-gal hor	50	175	1	72 x 28 x 57	1000

Two-Stage Fully Packaged *- include factory mounted aircooled after cooler, a mounted electrical automatic condensate drain valve, low oil level switch, magnetic motor starter mounted and wired, and Start-up Kit.*
Available voltages: 230/1/60 (5-7.5 HP only), 200/3/60, 230/3/60, 460/3/60, 575/3/60.
Please specify voltage required when placing your order. Dimensions may vary slightly on fully packaged models.

TS Series

The Ingersoll-Rand TS Series is a completely cast-iron, splash-lubricated, two-stage enblock design air compressor, and comes in three standard offerings: Basic, Fully Packaged, and Enclosed, in both base-plate and tank-mounted configurations. Standard features include: factory-mounted and wired motor starter, automatic start/stop control, ASME coded receiver tank, oil sight glass and totally enclosed beltguard. Additionally, Fully Packaged includes an air-cooled aftercooler, auto tank drain and low oil level shutdown switch. Enclosed adds a compartmentalized acoustic sound enclosure that reduces noise levels as low as 69dBA.

- 175 PSI maximum operating pressure
- 100% continuous duty for tough applications
- Extended pump life for years of trouble-free service

Basic package – tank-mounted

Tank-mounted with enclosure

Premier Series

Ingersoll-Rand Premier Series compressors can help keep your business productive and profitable. With their low maintenance requirements, rugged cast-iron construction and 175 PSI capacity air power, you've got the volume and pressure to run a whole shop of hoists, sprayers, grinders, wrenches and other tools. All Premier Series air compressors are fully assembled (wired, piped and tested) and are easy to operate and maintain. Standard features include a deluxe magnetic motor starter with on/off switch and hour meter, intake air filter/silencer, low oil level shutdown switch, oil sight glass (20-30 HP only), air-cooled aftercooler, electric condensate drain valve, 2,000-hour All Season Select® synthetic lubricant, start-up/maintenance kit providing everything needed for a full year of operation, and a full two-year warranty.

- Durable cast-iron, two-stage, V cylinder design offers extended pump life for years of trouble-free service
- 175 PSI maximum operating pressure
- 100% continuous duty operation
- Stainless steel, fail-safe valve design

120-Gallon Horizontal

80-Gallon Vertical

Model Number	HP	Tank	ACFM @ 175 PSI	Max PSI	Package NPT Outlet (in)	Net Dimensions LxWxH (in)	Weight (lbs)
2545N7.5-PS	7.5	80-gal vert	27	175	3/4	42 x 29 x 74	510
2000E20-PS	20	120-gal hor	72	175	1	72 x 35 x 60	1500
2000A25-PS	25	240-gal hor	82	175	1	93 x 26 x 66	1500
2000E25-PS	25	120-gal hor	82	175	1	72 x 35 x 60	1500
2000A30-PS	30	240-gal hor	100	175	1	93 x 26 x 66	1700
2000E30-PS	30	120-gal hor	100	175	1	72 x 35 x 60	1500

Available voltages: 200/3/60, 230/3/60, 460/3/60, 575/3/60. Please specify voltage prior to placing your order.
Optional 240-gallon tank available (20-30 hp models only).

Air Compressor Accessories

Start-Up Kits

Start-Up Kits include all the parts needed to maintain your compressor for one year, plus the added protection of extended warranty coverage.

Kit Includes:

- All Season Select® lubricant – a synthetic, all-temperature blend designed to increase efficiency, reduce wear and prevent carbon buildup
- Replacement filter elements
- Engine oil and filters are also included in kits for gas-driven compressors
- Two-year extended warranty (pump only)

Electric Start-Up Kits

Compressor Model	*CCN*
2340, 2475	32305880
2545, 7100, 2545N7.5-PS, 7100E10-PS	32305898
2000-PS	20102877
SS3F2-GM, SS3J2-WB, SS3L3, SS3R2-GM, SS3J3-AS, SS3J3-WB, SS3R2-GM	97338099
SS5L5	20100251
TS5 Unenclosed	32332827
TS5 Enclosed	85584324

Ingersoll-Rand also offers extended warranties up to five years. In order to qualify, compressors must have started and run continuously on All Season Select® lubricant.

Gas Start-Up Kits

Compressor Model	*CCN*
2475F11GH (Honda)	32312936
2475F11.5 GKA (Kawasaki)	32498511
2475F12.5 G (Kohler)	32305872
2475F15GIR (IR)	49816150
SS3J5.5GB-WB (Briggs & Stratton)	97338610
SS3J5.5GH-WB (Honda)	97339501
SS3J5.5GH-AS (Honda)	97339501
2340S9GH-AS (Honda)	20103420

All Season Select® Lubricant

All Season Select® lubricant is a synthetic, all-temperature blend that is designed to increase efficiency, reduce wear and prevent carbon buildup. It performs four times longer than petroleum-based lubricants. Recommended 2,000 hours of service between lubricant change-out under normal operating conditions.

Coolant/Lubricant	Base Stock	Viscosity Index	Hours	ISO Viscosity Grade	SAE Grade
All Season Select®	Diester	128	2,000	68/150	20W40

All Season Select		CCN
Box of quarts	(12) 1-qt	32318883
Box of 1/2 liter	(6) 1/2 liter	97338149

Refrigerated Air Dryers

Ingersoll-Rand refrigerated air dryers protect your tools, machinery and equipment from harmful moisture while saving energy and reducing system downtime. The unique design improves dryer efficiency and minimizes maintenance through fewer moving parts. The easy-to-read diagnostic controls provide a constant indication of dryer performance. Units are compact, lightweight and can be easily floor or wall mounted. IR refrigerated air dryers are ideal for paint spraying/coating operations or pneumatic instrumentation applications, and use environmentally friendly refrigerants – R134A or 407C.

Refrigerated DryStar

The economically priced DryStar cools compressed air by mechanical refrigeration to a 33-39°F pressure dewpoint. Condensed water is removed through an automatic drain valve. Featuring low power consumption, DryStar dryers are simple to install with a quick fit electrical connection. Each DS dryer uses environmentally friendly R134A refrigerant.

Ratings are based on 100°F inlet air temperature and 100 PSIG inlet air pressure. Maximum inlet temperature is 140ºF, maximum pressure is 232 PSIG.

Model Number	Nominal Air Flow SCFM	Maximum Pressure (PSIG)	Maximum Absorbed Power (kW)	Air Connection NPT (in)	Dimensions HxWxD (in)	Approx. Weight (lbs)
DS5	5	232	.24	3/8	17.9 x 7.8 x 17.7	40
DS10	10	232	.24	3/8	17.9 x 7.8 x 17.7	40
DS15	15	232	.27	3/8	17.9 x 7.8 x 17.7	44
DS25	25	232	.36	1/2	20.9 x 11.1 x 23.6	70
DS35	35	232	.51	1/2	20.9 x 11.1 x 23.6	74
DS50	50	232	.69	3/4	23.8 x 13.9 x 27.6	100
DS75	75	232	.88	3/4	23.8 x 13.9 x 27.6	122

Refrigerated ThermoStar

ThermoStar refrigerated air dryers cool compressed air by mechanical refrigeration to a 33-39°F pressure dewpoint. Condensed water is removed through a timed solenoid automatic drain valve. A precooler maximizes the refrigeration efficiency, and a compact heat exchanger insures the smallest possible footprint. Each TS dryer uses environmentally friendly R407C refrigerant and features a standard controller with on/off main switch (separate power on line and alarm lamps), and electric drain valve with adjustable operation set points. Ratings are based on 100°F inlet air temperature and 100 PSIG inlet air pressure. Maximum inlet temperature is 122°F; maximum pressure is 175 PSIG.

Model Number	Nominal Air Flow SCFM	Maximum Pressure (PSIG)	Maximum Absorbed Power (kW)	Electrical Supply	Dimensions HxWxD (in)	Air Connections	Approx. Weight (lbs)
TS-75	75	175	0.58	115-1ph-60 Hz	19 x 20 x 30	1" NPT	139
TS-100	100	175	0.73	115-1ph-60 Hz	24 x 22 x 31	1-1/2" NPT	143
TS-150	150	175	0.83	208/230V-1ph-60 Hz	24 x 22 x 31	1-1/2" NPT	146
TS-200	200	175	1.19	208/230V-1ph-60 Hz	24 x 22 x 31	1-1/2" NPT	154

Air Compressor Accessories

Dessicant Air Dryers

Ingersoll-Rand desiccant air dryers save energy, reduce system downtime and protect your tools, machinery and equipment from harmful moisture. Desiccant air dryers protect branch lines exposed to temperatures below freezing and are ideal for small systems and moisture sensitive point-of-use applications where clean, dry, oil-free air is required. Desiccant air dryers provide direct absorption, convenient, space-saving wall or floor mounting, easy installation and maintenance, and quiet operation.

ToolGuard Air Dryer

Ingersoll-Rand's ToolGuard Air Dryer protects your air operated tools, instruments and spray equipment from harmful moisture (liquids and vapors) typically associated with delivered air quality from an air compressor. Convenient point-of-use installation for efficient filtration. Removes harmful moisture including liquids and vapors. Portable hand-carry size with versatile floor or wall mounting capability.

- Provides continuous clean, dry air where you need it
- Portable hand-carry size with versatile floor or wall mounting capability
- No electrical requirements

Each dryer includes a desiccant cartridge with a color change indicator for cartridge replacement. Replacement cartridges sold separately.

Maximum : Pressure	Maximum Temperature	Minimum Temperature	Flow Range	Weight	Connections
200 psig	113°F	40°F0 to 25 scfm	Weight:	14.5 lbs	3/8" NPT

ToolGuard CCN# 42525162.
Replacement cartridge CCN# 38027645.

Compressed Air Filters

Ingersoll-Rand coalescing filters save energy and protect your tools, machinery and equipment from harmful contaminants by effectively removing solid particulates, liquid water, oil and aerosols from compressed air. The GP Series removes particulates down to 1.0 micron, which meets General Industry requirements for coarse filtration. The HE Series removes contaminants down to .01 micron, which meets difficult compressed air filtration requirements. The new filter design is easy to install and is loaded with standard features to reduce maintenance and downtime. All filters feature a 10-year warranty on housing.

Model Number	Capacity SCFM	Maximum Pressure (PSIG)	Inlet/Outlet NPT (in)	Filter Rating Microns	Dimensions HxW (in)	Replacement Element Model No.
IRGP19	19	232	1/4	1	9.8 x 3.5	IRGP19E
IRGP40	40	232	3/8	1	10.4 x 3.5	IRGP40E
IRGP64	64	232	1/2	1	11.3 x 3.5	IRGP64E
IRGP123	123	232	3/4	1	13.9 x 5.1	IRGP123E
IRGP216	216	232	1	1	17.5 x 5.1	IRGP216E
IRHE19	19	232	1/4	.01	9.8 x 3.5	IRHE19E
IRHE40	40	232	3/8	.01	10.4 x 3.5	IRHE40E
IRHE64	64	232	1/2	.01	11.3 x 3.5	IRHE64E
IRHE123	123	232	3/4	.01	13.9 x 5.1	IRHE123E
IRHE216	216	232	1	.01	17.5 x 5.1	IRHE216E

EDV-2000 Electronic Drain Valve

The EDV-2000 is a full-feature automatic electronic drain valve that cost-effectively removes condensate from compressors, receivers, dryers, aftercoolers, filters and drip legs. Each EDV-2000 includes an electric drain, manual blowdown valve, and a strainer/ball valve, which prevents debris from clogging the drain valve. The maximum pressure is 250 PSI.

- Manual test button
- Two-year warranty
- Prevents rusting
- Delivers drier air to extend the life of tools and pneumatic equipment
- Eliminates manual draining

Voltage 110/120V	Voltage 230/240V	Inlet Pipe Connection	Outlet Pipe Connection	Orifice (in)
37995925	37995933	0.50 NPT	0.25 NPT	3/32

ADV-Automatic Drain Valve Kit

Designed to cost-effectively remove water from your air compressor tank. The easy-to-install ADV Kit includes a full-feature automatic electronic drain with a timer, solenoid and 115V power cord; (2) discharge tubes; (1) straight connector; (1) 90 degree elbow; (1) floor mounting bracket; (1) mounting bracket stud and installation instructions. Suitable for 20 to 24-inch-diameter vertical tanks and most horizontal tanks. NEMA 4 electric components.

- Prevents rusting
- Delivers drier air to extend the life of tools and pneumatic equipment
- Eliminates manual draining

Voltage	Weight (lbs)	Dimensions LxWxH (in)	Cord Length	Maximum Pressure	Timer Interval	Drain Cycle
115V	1-1/2	4-3/4 x 3-1/2 x 2	6' w/AC plug	250 PSI	.5-45 sec	.5-10 sec

ADV-Automatic Drain Valve Kit CCN# 38004420.

Vibration Pads

Part Number	*Size*	*Shipping Weight*
32321028	5 x 5 x 1	1

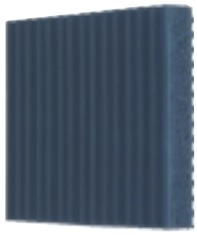

SIMPLAIR Piping SpeedLine (SL)

SpeedLine (SL) has been designed to provide an efficient, low-cost method of installing air compressor systems using bendable tubes and a unique round aluminum extrusion. SL is a unique round aluminum extrusion, anodized to prevent corrosion and manufactured in-line with SimplAir's advanced piping concept.

- No corrosion/high-quality air
- More efficient air delivery
- Reduced pressure loss
- Higher flow rates
- Easy and fast installation

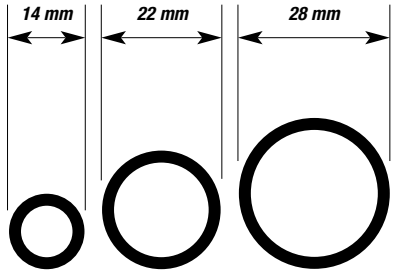

SpeedLine (SL) is available in 3 sizes: 14 mm, 22 mm, and 28 mm.

Lubrication Equipment

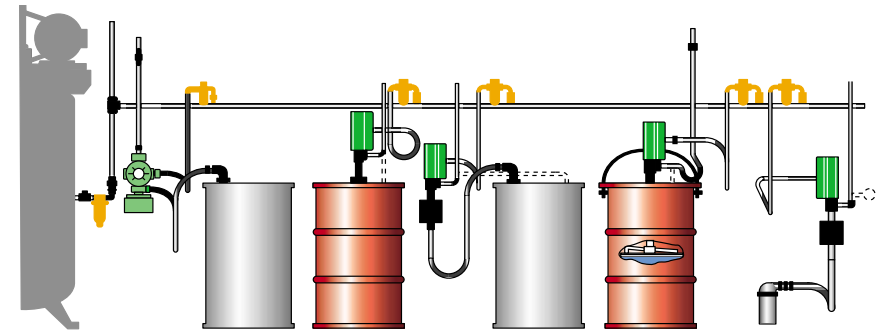

Ingersoll-Rand lubrication equipment reflects the same high standards of performance as IR tools and air compressors, with a full range of products that will keep all types of fluids moving efficiently. They are backed by more than 70 years of experience in pump and air system technology, and include models specifically designed for popular applications:

Thunder® Piston Pumps for grease…or for motor oil, gear oil, and transmission fluid

- Unique design improves flow, reduces pulsation, and extends service life
- 50 percent fewer parts than comparable pumps
- Fast, easy in-line service, with no special tools required
- Stall-free, ice-free air motor with tough, durable housing
- Five year warranty

Diaphragm Pumps for drum use with oil and other light fluids…or for direct use with antifreeze, water, windshield cleaning fluid, fuel, solvents, oils, transmission fluid, and waste oil

- Patented unstallable air valve applies constant pressure to ensure resets
- Bolted construction provides better joint integrity and fast, easy servicing, while helping to eliminate material spills and leaks
- No lubrication or complex controls required
- Variable flow rates, by adjusting air pressure
- Five year warranty
- Accessories that complement IR pump performance
- Digital/metered fluid control handles that are precise and easy to use
- High pressure grease control handles
- Many models feature a five year warranty

All IR lubrication equipment products are built to global quality standards to deliver unmatched dependability and productivity. Your IR distributor can provide complete details and recommendations for your facility.

Thunder® Piston Pumps

Reliable - Thunder features a stall-free, ice-free air motor design (patents applied for) contained in a rugged housing that will withstand most working environments.

Fewer Parts - Thunder pumps are constructed with 50% fewer parts than the majority of comparable pumps. Install Thunder and see for yourself how fewer parts translate into fewer headaches when it comes to service or routine maintenance.

No Mechanical Assist - Thunder's valving design (patents applied for) uses no trip rods or push pins to break.

Minimum Number of Tools, No Special Tools - If you can find a standard wrench you can service Thunder.

In-line Service - You can service Thunder right where it stands, avoiding the costly tear-down/removal/replacement cycle that most pumps require.

Thunder's Design improves flow, reduces pulsation and extends service life.

All pumps come equipped with a 2" bung adapter, standard.

All-Weather Pumping - Thanks to its unique bung adapter design, by adding an optional seal kit, P/N# 67088-X, Thunder can be used outdoors or in, with complete confidence, making it perfect for lube rig installation.

Noise Levels Within Industry Standards - This is one form of thunder that's quiet: 2" models: 80 dBA; 3" models: 85dBA.

Lube-Free Air Motor

Backed by a five-year warranty

Thunder Pumps and Packages for Motor Oil, Gear Oil, Transmission Fluid

LP2100-1

This portable oil package utilizes a 3:1 ratio pump and 2" air motor for use with any standard 16 gallon oil keg, and provides a dolly for easy movement from bay to bay. IR pump packages provide everything you need to begin oil service, including pump, control handle, dolly, drum cover, material hose, and ball check valve.

LP3100-1

This package utilizes a 5:1 ratio oil pump and 3" air motor for use with longer hoses, including hoses on reels. It includes a dolly and all other standard package elements—everything you need to begin oil service.

Model Number	Working Flow GPM	Free Flow GPM	Air Inlet NPT(F)	Fluid Outlet NPT(F)	Container Size	Pump	Drum Cover	Fluid Meter	Hose	Control Handle	Accessories
3:1 Ratio 2" diameter air motor, 150 max air inlet pressure											
LM2203A-11-B	6	9	1/4"	3/4" / 1/2"	Stub	–					
LM2203A-31-B	6	9	1/4"	3/4" / 1/2"	16 Gal	–					
LM2203A-41-B	6	9	1/4"	3/4" / 1/2"	55 Gal	–					
LP2100-1	6	9	1/4"	3/4" / 1/2"	16 Gal	LM2203A-31-B	94421	635190-1	623501-6	635391-1	Adapter, Dolly, Ball Check Valve
5:1 Ratio 3" diameter air motor, 150 max air inlet pressure											
LM2305A-11	6	9	1/4"	1 1/2" / 1/2"	Stub	-					
LM2305A-31	6	9	1/4"	1 1/2" / 1/2"	16 Gal	-					
LM2305A-41	6	9	1/4"	1 1/2" / 1/2"	55 Gal	-					
LP3100-1	6	9	1/4"	1 1/2" / 1/2"	16 Gal	LM2305A-31	94421	635190-1	623501-6	635391-1	Dolly

Thunder® Piston Pumps

Thunder Pumps and Packages for Grease

LP2002-1-B

35-lb. grease package features a 2" diameter air motor and 50:1 ratio, and includes all of the essential components for fast, consistent grease pumping, including adapter, 10-ft. material hose, z-swivel and standard grease gun.

LP2004-1-B

120-lb. grease package provides higher capacity components for pumping more material with ease.

LP2006-1-B

120-lb. grease package adds a dolly to the LP2004-1-B package for easy mobility in the shop.

LP3001-1

35-lb. grease package features a 3" diameter air motor and 50:1 ratio for greater pumping capacity, and includes pump, drum cover, handle, follower plate, 10-ft. material hose, Z-swivel, adapter, and booster gun.

LP3003-1

120-lb. grease package handles higher capacity pumping, and adds a dolly for easy mobility in the shop.

LP3004-1

120-lb. grease package includes the same elements as the LP3003-1 package, but substitutes a standard grease gun and dolly.

Model Number	Working Flow Lbs. per Min.	Free Flow Lbs. per Min.	Air Inlet NPT(F)	Fluid Outlet NPT(F)	Container Size	Pump	Drum Cover	Follower Plate	Fluid Hose	Control Handle	Accessories
50:1 Ratio 2" diameter air motor, 150 max air inlet pressure											
LM2250E-21-B	2	9	1/4"	3/4" / 1/2"	35 lbs	-					
LM2250E-61-B	2	9	1/4"	3/4" / 1/2"	60 lbs	-					
LM2250E-31-B	2	9	1/4"	3/4" / 1/2"	120 lbs	-					
LM2250E-41-B	2	9	1/4"	3/4" / 1/2"	400 lbs	-					
LP2002-1-B	2	9	1/4"	3/4" / 1/2"	35 lbs	LM2250E-21-B	94420	640095-2-B	624201-10	636111	Adapter, Handle, Z-swivel
LP2004-1-B	2	9	1/4"	3/4" / 1/2"	120 lbs	LM2250E-31-B	94421	640165	624201-10	636111	Adapter, Z-swivel
LP2006-1-B	2	9	1/4"	3/4" / 1/2"	120 lbs	LM2250E-31-B	94421	640165	624201-10	636111	Adapter, Z-swivel, Dolly
50:1 Ratio 3" diameter air motor, 150 max air inlet pressure											
LM2350E-21-B	4	7.5	1/4"	1 1/2" / 1/2"	35 lbs	-					
LM2350E-61-B	4	7.5	1/4"	1 1/2" / 1/2"	60 lbs	-					
LM2350E-31-B	4	7.5	1/4"	1 1/2" / 1/2"	120 lbs	-					
LM2350E-41-B	4	7.5	1/4"	1 1/2" / 1/2"	400 lbs	-					
LP3001-1	4	7.5	1/4"	1 1/2" / 1/2"	35 lbs	LM2350E-21-B	94420	640095-2-B	624201-10	636103	Adapter, Handle, Z-swivel
LP3003-1	4	7.5	1/4"	1 1/2" / 1/2"	120 lbs	LM2350E-31-B	94421	640165	624201-10	636103	Adapter, Z-swivel, Dolly
LP3004-1	4	7.5	1/4"	1 1/2" / 1/2"	120 lbs	LM2350E-31-B	94421	640165	624201-10	636111	Adapter, Z-swivel, Dolly

Diaphragm Pumps

Advantages of IR Air-Operated Diaphragm Pumps

Unbalanced Air Valve Eliminates Stalling. Start it up, shut it down — no matter how often or how long, the IR Diaphragm Pump will start pumping every time.

No Lubrication Required. One less maintenance detail to log. No oil droplets to contaminate your process or work site. And, the IR Diaphragm is more forgiving in dirty air service.

Pumping Efficiency Remains Constant. Since IR Diaphragm Pumps contain no rotors, gears, vanes or pistons to wear out — there is no gradual decline in pump performance. And the IR "Unstallable" air valve uses less power to operate than competitive brands.

No Foaming or Shearing of Material. Process fluids enter and exit the IR Diaphragm Pump unchanged.

Variable Flow Rates. By simply adjusting air pressure to the pump, or restricting the discharge line, you have better, more precise control over your pump's flow rate — without pump damage.

Positive Priming Provides Easy Start-Ups. Internal pump fluid check valves are located close to the diaphragm chambers — assuring positive self-priming — even from dry start.

Runs Dry Without Damage. Because there are no sliding or close-fitting parts at risk — the IR Diaphragm Pump can run dry without damage.

Lightweight and Portable. Most IR Diaphragm Pumps can be carried from job to job with ease.

No Complex Controls. Unlike electric pumps, IR Diaphragm Pumps contain no wires, circuits, fuses or by-pass controls to burn out and replace.

Diaphragm Drum Pumps

Pump Features

Choose from Aluminum, Stainless Steel or Polypropylene Body Construction - IR Drum pumps are available in three body material for optimum fluid compatibility.

Stall-Free Operation - IR Diaphragm Drum Pumps feature a patented "unbalanced" air valve design that avoids stall-out, even under low air inlet pressures.

Bolted Construction - Unlike traditional band-clamp style pumps, IR Diaphragm Drum Pumps utilize bolted fasteners for leak-tight integrity.

5-Year Warranty

Model Number	Body Material	Diaphragm & O-ring Material	Air Inlet NPT(F)	Fluid Outlet NPT(F)	Max GPM	Compatible Fluids
1/2" Diaphragm Pumps						
66605J-344	Polypropylene	Teflon	1/4"	1/2"	13	Windsheld Fluid, Motor/Gear Oil, Transmission Fluid, Antifreeze
66605J-322	Polypropylene	Nitrile	1/4"	1/2"	13	Windsheld Fluid, Motor/Gear Oil, Transmission Fluid, Antifreeze
66605J-388	Polypropylene	Polyurethane	1/4"	1/2"	13	Windsheld Fluid, Motor/Gear Oil, Transmission Fluid, Antifreeze
PD05P-AAS-PGG	Aluminum	Nitrile	1/4"	1/2"	13	Windsheld Fluid, Motor/Gear Oil, Transmission Fluid, Antifreeze
666056-6A4	Polypropylene	Teflon	1/4"	1/2"	13	Solvents
1" Diaphragm Pumps						
666100-344-C	Aluminum	Teflon	1/4"	1"	35	Windsheld Fluid, Motor/Gear Oil, Transmission Fluid, Antifreeze
666100-362-C	Aluminum	Nitrile	1/4"	1"	35	Windsheld Fluid, Motor/Gear Oil, Transmission Fluid, Antifreeze
650717-C	Aluminum	Viton	1/4"	1"	29	Unleaded Fuel
650709-C	Aluminum	Buna-N	1/4"	1"	29	Diesel Fuel, Kerosene, Aviation Fuel, Fuel Oil

Diaphragm Pumps

612999-3
50/50 AntiFreeze/Water Blending Diaphragm Pump Package

This 1:1 ratio, one-inch diaphragm pump has dual inlets (3/4-inch NPTF) to allow simultaneous pumping and blending of antifreeze and water. Package includes pump, wall mount, siphon tube and hoses, and air filter/regulator.

650709-C
U.L. Approved Fuel Pumps

Designed specifically for high-volume transfer, bulk-unloading, or fuel applications. **These pumps meet UL 79 specification code** and are compatible with gasoline, aviation fuel, fuel oil and kerosene.

613201-2-C
Calcium Chloride Tire-Fill Pump Package

Designed for the purpose of evacuating and filling tires with calcium chloride ballast solution. Package includes a 666100-441-C, 1" Ports Diaphragm Pump. (Aluminum construction with neoprene diaphragms and Teflon® checks for compatibility with corrosive calcium chloride) and 60154 Hose / Strainer / Gun Assembly - Also includes Check Valve and all required lamps and related hardware.

612999-4
Waste Oil Drains and Differential Oil Evacuation Packages

This convenient package provides everything required for draining oil from specific vehicle components, and includes a diaphragm pump, wall mount bracket, inlet and outlet hose assemblies, filter/regulator, air hose and gauge, fluid coupler and air control valve.

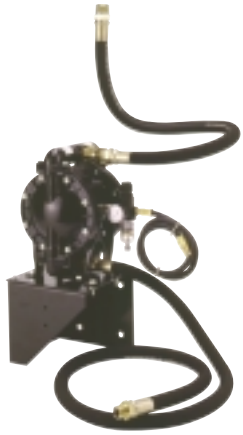

Model Number	Application	Body Material	Diaphragm & O-ring Material	Air Inlet NPT(F)	Fluid Outlet NPT(F)	Max GPM	Package Includes
650715-C	50/50 Mixing of Antifreeze and Water	Aluminum	Nitrile	1/4"	1"	35	Wall mount bracket
612999-3	50/50 Mixing of Antifreeze and Water	Aluminum	Nitrile	1/4"	1"	35	Wall mount, Siphon tubes, Material hoses
DA005-PPNN-2-A	Transfer of Water/Oil	Polypropylene	Nitrile	1/4"	1/2"	11	Bung adapter, Siphon tube, Weather seal, Base
DA005-PPNN-2-N	Transfer of Water/Oil	Polypropylene	Nitrile	1/4"	1/2"	11	Bung adapter, Siphon tube, Seal, Base, 10' Fluid hose, Nozzle
DA005-ASTT-2-A	Transfer of Solvents	Aluminum	Teflon	1/4"	1/2"	11	Bung adapter, Siphon tube, Weather seal, Base
DA005-APNN-2-A	Transfer of Oil	Aluminum	Nitrile	1/4"	1/2"	11	Bung adapter, Siphon tube, Weather seal, Base"
DA005-APNN-B-P	Transfer of Oil	Aluminum	Nitrile	1/4"	1/2"	11	Bung adapter, Siphon tube, Seal, Base, 10' Fluid hose, No-Drip Nozzle
612999-5	Waste Oil Evacuation	Polypropylene	Nitrile	1/4"	1/2"	11	Wall mount, Inlet and Outlet fluid hoses
612999-4	Waste Oil Evacuation	Aluminum	Nitrile	1/4"	1"	30	Wall mount, Inlet and Outlet fluid hoses
612999-6	Waste Oil Evacuation	Polypropylene	Nitrile	1/4"	1/2"	11	Hanging bracked and outlet hose, 8' Suction hose
613201-2-C	Calcium Chloride Tire Filling	Aluminum	Neoprene	1/4"	1"	30	Inlet and outlet hoses, Strainer, Control handle, Check valve

Control Handles

635390-22
Digital, Metered Fluid Control Handles

Our metered control handle features a patented oval gear wheel design for precise reliable measurement. Its digital LCD readout operates on two standard alkaline batteries.

- Lightweight
- Precise
- Fast Reset
- Totalizes

635383
Metered Flow Control Handles for Motor Oil, Gear Oil, Transmission Fluid

Dispensing valve indicator lets operator see when to stop fluid flow. Totalizer registers up to 9,999 units. All metered control handles include 1/2 inch NPT in-line swivel.

635364
Preset, Metered Flow Control Handles for Motor Oil, Gear Oil, Transmission Fluid

Preset unit automatically shuts off when set quantity of fluid is delivered and meter indicator returns to zero. Totalizer registers up to 9,999 units.

636111
High-Pressure Grease Control Handles

Dispenses lubricant at line pressure for lubricating grease fittings. Includes inlet material filter and curved nozzle with hydraulic coupler. Remove the 1/8 (M) x 3/8 (M) adaptor for 3/8 (F) porting.

Model Number	Description	Max. Working Pressure	Fluid Inlet NPT(F)	Fluid Outlet NP	Meter/Totalizing Increments
Motor Oil, Gear Oil, Transmission Fluid					
635193	High Volume Dispensing Handle	600	3/4"	No-drip tip w/ flex hose	–
635392	Dispensing Handle	1000	1/2"	No-drip tip w/ flex hose	–
635390-22	Digital Metered Control Handle	1000	1/2"	No-drip tip	Quarts/Gallons
635391-11	Rigid Control Handle	1000	1/2"	No-drip tip	–
635390-2	Digital Metered Control Handle	1000	1/2"	No-drip tip w/ flex hose	Quarts/Gallons
635391-1	Flex Control Handle	1000	1/2"	No-drip tip w/ flex hose	–
635383	Metered Control Valve	1000	1/2"	No-drip tip w/ flex hose	Quarts/Gallons
635370	Dial Metered Control Handle	1000	1/2"	1/2" NPT"	Quarts/Quarts
635364	Preset Control Handle	1000	1/2"	No-drip tip	Quarts/Gallons
Grease					
636101	High Flow Control Handle	7500	3/8"	1/8" NPT"	–
636111	Standard Control Handle	7500	1/8(M) or 3/8(F)	Hydraulic Coupler	–
636103	Booster Control Handle	7500	1/8(M) or 3/8(F)	Hydraulic Coupler	–

Lubrication Equipment Accessories

Grease Gun Accessories

Hydraulic Adapters

629713
Extra capacity hydraulic extension adapter has flexible rubber hose. Use with standard hydraulic coupler.

629713

636003
Hydraulic adapter has locking sleeve to fit standard diameter coupler.

636003

636039
Hydraulic adapter has locking sleeve for use on nozzle, hose or adapters with 1/8 NPT(M).Push on, pull off connector fits standard diameter hydraulic fitting.

636039

636065
Needle point adapter has rubber tip.

636065

Model Number	Inlet Thread Connection (inches)	Length Inches (mm)	Maximum Working Pressure PSI (bar)
629713	1/8 NPT(M)	12 (304)	5,000 (345)
636003	–	7 (177)	8,000 (552)
636039	1/8 NPT(F)	–	8,000 (552)
636065	–	–	8,000 (552)

Standard Hydraulic Couplers

636027
Small diameter hydraulic coupler

636028

636028
Reversible jaw hydraulic coupler

636030
Hydraulic coupler and tube

636046

636037
Hydraulic coupler and tube

636046
Small diameter hydraulic coupler with ball check.

Model Number	Inlet Thread Connection (inches)	Length Inches (mm)	Maximum Working Pressure PSI (bar)
636027	1/8 NPT(F)	1-5/8 (41)	6,000 (414)
636028	1/8 NPT(F)	1-5/8 (41)	10,000 (689)
636030	11/16-16(F)	–	
636037	1/8 NPT(F)	6-1/4 (159)	
636046	1/8 NPT(F)	1-7/16 (37)	6,000 (414)

Grease Gun Accessories

Button Head Coupler

636020
Standard button coupler. Can be converted to either push-on or pull-on.

636024

636024
Standard button coupler. Can be converted to either push-on or pull-on.

636060
Giant button head coupler with pressure relief valve can be converted to either push-on or pull-on.

636019
Giant button head coupler can be converted to either push-on or pull-on. (For hand guns only. Not to be used with air-operated pumps!)

Model Number	Inlet Thread Connection (inches)	Length Inches (mm)	Maximum Working Pressure PSI (bar)
636020	7/16-27(F)	–	8,000 (552)
636024	1/8 NPT(F)	–	8,000 (552)
636060	1/8 NPT(F)	–	8,000 (552)
636019	7/16-27(F)	–	8,000 (552)

Grease Fittings Accessories

Straight

Model Number	Description	Thread Size NPT	Height
6000	Straight	1/8 (M)	21/32
6001	Straight	1/8 (M)	1-1/4
6002	Straight	1/8 (M)	1-3/4
6026	Straight	1/4 (M)	7/8
6009	Short straight	1/4-28	17/32
6010	Long straight	1/4-28	11/16
6029	Straight	3/8 (M)	1-1/8
636019	7/16-27(F)	–	8,000 (552)

Elbow

Model Number	Description	Thread Size NPT	Height
6004	30˚ elbow	1/8 (M)	29/32
6005	45˚ elbow	1/8 (M)	7/8
6011	45˚ elbow (short)	1/4-28	13/16
6006	65˚ elbow	1/8 (M)	7/8
6028	67-1/2˚ elbow	1/4 (M)	1-5/32
6007	90˚ elbow	1/8 (M)	27/32
6013	90˚ elbow (short)	1/4-28	3/4

Drive Type Fittings

Model Number	Description	Thread Size NPT	Height
6060	Straight	5/16 serrated	5/8
6056	Straight	1/4 serrated	37/64
6069	Straight	3/16 serrated	19/32
6070	Straight (less spring and ball)	3/16 serrated	37/64

Elbow Bodies

Model Number	Description	Thread Size NPT	Height
6045	90˚ elbow	1/8 (M) x 1/8 (F)	1

Button-Head Fittings

Model Number	Description	Thread Size NPT	Height
2087	Standard	1/8 (M)	13/16
6035	Standard	1/4 (M)	27/32
6041	Giant	1/2 (M)	1-3/32

Grease Fitting Asortment

640049

100 piece selection of the most common grease fittings packaged in a 5-compartment plastic container. Includes:

Quantity	Model	Description
20	6000	1/8 NPT (M) Straight
50	6009	1/4-28(M) Short straight
10	6004	1/8 NPT(M) 30˚elbow
10	6006	1/8 NPT(M) 65˚ elbow
10	6013	1/4-28 (M) 90˚ elbow

Grease Fitting Easy-Out Tool

636053

Four function tool: 1) easy-out for removing broken fittings; 2) 1/8-inch NPT tap; 3) 3/8-inch socket for removing hydraulic fittings; and 4) 7/16-inch socket for removing hydraulic fittings.

636054

Four function tool: 1) easy-out for removing broken fittings; 2) 1/4-inch-28 tap; 3) 5/16-inch socket for removing hydraulic fittings; and 4) 3/8-inch socket for removing hydraulic fittings.

Accessories

Ingersoll-Rand offers you an extensive line of accessories to match your Ingersoll-Rand tools with the requirements of every job. These accessories put the reliability and quality of Ingersoll-Rand behind every job you do.

Lubricating your tools regularly is the single most important way you can protect them and prolong their working life. Ingersoll-Rand's air tool lubricant contains rust inhibitors to prevent corrosion. Unlike engine oil or transmission fluid, our oils and greases are specially formulated to collect moisture and keep the tool's working parts operating smoothly and efficiently.

Our regulators will maintain your tool's critical speed and conserve compressed air. Our filters keep wet air and dirt out of the air line, including particles as small as five microns. So there's less tool maintenance and fewer operating problems. If you want to tune up your tool yourself, you can save money by using one of our Tune-Up Kits for the air motor, hammer mechanism, and ratchet head. The kit costs less than the individual parts.

Ingersoll-Rand protective boots will protect your air impact wrenches from external damage. They also absorb some of the vibration as you work. Or you can improve the fit and feel by putting one of our Comfort Grips on the handle of your air impact tools.

You can move around freely as you work by adding our unique Swivel-It™ swivel inlet to your air tool to keep your air hose out of your way. You can get couplers, nylon recoil hoses, hose whips and balancers to match your Ingersoll-Rand tool. It's easy to select what you need, using the air hose diameter on the tool specification and air system accessory charts.

Tune-Up Kits

You can use our popular kits to keep your air impact tools performing at top power. Save money, too – the kit costs less than the individual parts.

Hammer Mechanism Tune-Up Kits

Contains the anvil, hammers (or pins) and gaskets for the impact mechanism. The 110-THK1 includes only the cam ball, two anvil pins, and anvil spring.

Tool No.	*Kit No.*
222	222-THK1†
223	223-THK1
231, 244	231-THK1
231C, 2131A, 244A, 231H	231C-THK1
231-2, 244-2	231-THK2
231H-2, 244A-2, 2131A-2	231C-THK 2
235	235-THK1
255	255A-THK1
2131	2131-THK1
2131-2	2131-THK1-2

† *Availability subject to prior sale*

Motor Tune-Up Kits

Rev up your tool's motor using this kit which contains the vanes, gaskets and seals for a complete tune-up.

One kit, the 231-TK3, also includes ball bearings.

Tool No.	*Kit No.*
211	211-TK2
212	212-TK2
221, 221-2	221-TK2
223	223-TK2
231, 231-2	231-TK2
231, 231-2	231-TK3*
235	235-TK2
244, 244-2	244-TK2
251	251-TK1
252	252-TK2
255A	255A-TK1
261, 271	261-TK2
280, 280-6, 280-S6	280-TK2
281, 281-6, 281-S6, 291	281-TK1
285, 285-6, 285-S6	285-TK1
295, 295-S	295-TK2
290, 290-S	290-TK2
7801, 7806	728-TK3
2131, 2131-2	2131-TK2

* *includes bearings*

Ratchet Head Kits

Rebuild your air ratchet's head using this complete kit.

Tool No.	*Kit No.*
104, 103	104-TK1
106, 107, 107XP	107-TK1
109, 109XP	109-TK1
111	111-TRK1
1103	1103-TRK1
1107	1107-TRK1

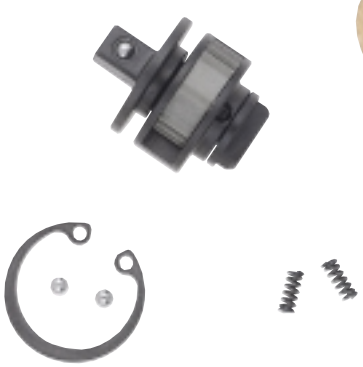

Valve Block Assembly Kit

Tool No.	*Kit No.*
222, 223	223-TVB1

Accessories

Accessories

Protective Tool Boots

Keep your Ingersoll-Rand air impact ratchets, wrenches, and drills free from external damage with protective boots. As you work, these boots also absorb some of the tool vibration, keeping you more comfortable, too.

Tool No.	*Boot No.*	*Material*
104	104-P32	Vinyl
107,1077, 110	106-P32	Vinyl
212	202-P32	Vinyl
205	205-P32	Vinyl
207	207-P32	Vinyl
211	211-P32	Vinyl
231, 231-2	231-P32	Vinyl
2131, 2131-2	2131-P32	Vinyl
235	235-P32	Vinyl
244, 244-2	244-P32	Vinyl
252	252-P32	Vinyl
255A	255A-P32	Vinyl
2161	2161-P32	Vinyl
2171	2161-P32	Vinyl
285-6, 285-S6, 285	285-P32	Vinyl
295, 295-6	295-P32	Vinyl
7802, 7802R, 7803	7802-P32	Vinyl

Couplers

Female Thread

Basic Size	*Pipe Thread*	*Plug Coupler*	*Manual Coupler*	*Automatic Coupler*
1/4"	1/8"FPT	MSPF21	–	MSCF21
	1/4"FPT	MSPF22	–	MSCF22
	3/8"FPT	MSPF23	–	MSCF23
3/8"	1/4"FPT	MSPF32	400ATH	MSCF32
	3/8"FPT	MSPF33	420ATH	MSCF33
	1/2"FPT	45ATH	440ATH	–
1/2"	3/8"FPT	MSPF43	500ATH	MSCF43†
	1/2"FPT	MSPF44	520ATH	MSCF44
	3/4"FPT	MSPF46†	540ATH	–

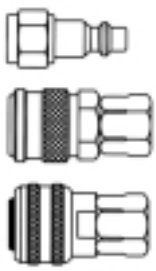

Male Thread

Basic Size	*Pipe Thread*	*Plug Coupler*	*Manual Coupler*	*Automatic Coupler*
1/4"	1/8"MPT	MSPM21	–	–
	1/4"MPT	MSPM22	–	MSCM22
	3/8"MPT	MSPM23	–	MSCM23
3/8"	1/4"MPT	MSPM32	410ATH	4100ATH
	3/8"MPT	MSPM33	430ATH	MSCM33
	1/2"MPT	MSPM34	450ATH	4500ATH
1/2"	3/8"MPT	MSPM43	–	MSCM43†
	1/2"MPT	MSPM44	530ATH	MSCM44
	3/4"MPT	MSPM46	550ATH	MSCM46†

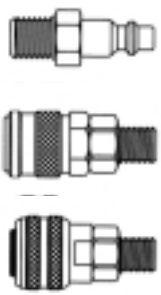

PR Series Composite Non-Marring Couplers

IR Part	*Description*	*Avg. Flow CFM*
PRSGF22	1/4" FNPT 1/4" Body, Safety Coupler	32
PRSGF23	3/8" FNPT 1/4" Body, Safety Coupler	32
PRSGF33	3/8" FNPT 3/8" Body, Safety Coupler	64
PRSGF34	1/2" FNPT 3/8" Body, Safety Coupler	64
PRSGF22	1/4" MNPT 1/4" Body, Safety Coupler	32
PRSGF23	3/8" MNPT 1/4" Body, Safety Coupler	32
PRSGF33	3/8" MNPT 3/8" Body, Safety Coupler	64
PRSGF34	1/2" MNPT 3/8" Body, Safety Coupler	64
PRSGF22	1/4" ID Hose 1/4" Body, Safety Coupler	32
PRSGF23	3/8" ID Hose 1/4" Body, Safety Coupler	32
PRSGF33	3/8" ID Hose 3/8" Body, Safety Coupler	64
PRSGF34	1/2" ID Hose 3/8" Body, Safety Coupler	64

PR Series Precision Connectors

IR Part	*Description*
PRF22	1/4" FNPT 1/4" Body, Connector
PRF23	3/8" FNPT 1/4" Body, Connector
PRF32	1/4" FNPT 3/8" Body, Connector
PRF33	3/8" FNPT 3/8" Body, Connector
PRPM22	1/4" MNPT 1/4" Body, Connector
PRPM23	3/8" MNPT 1/4" Body, Connector
PRPM32	1/4" MNPT 3/8" Body, Connector
PRPM33	3/8" MNPT 3/8" Body, Connector
PRPH22	1/4" ID Hose 1/4" Body, Connector
PRPH23	3/8" ID Hose 1/4" Body, Connector
PRPH33	3/8" ID Hose 3/8" Body, Connector
PRPH34	1/2" ID Hose 3/8" Body, Connector

Swivel Inlets

Catalog Number	*Thread Size (in.)*	*Air Flow Range (cfm/l/min.)*
ASA-1/4*	1/4	Adjustable
ASC-1/4**	1/4	0-25
AS-3/8	3/8	0-45
AS-1/2	1/2	0-65

** Adjustable*

*** Non-marking composite*

Recoil Hoses and Fittings

This is a permanently coiled hose which automatically returns to its original position, keeping it off the floor and out of your way as you work. Made with abrasive-resistant, memory-resilient Nylon II, it can be used for air and any gases, water, or liquids which are compatible with Nylon II. The hose is certified to a maximum pressure of 200 psi, and the hose ends and fittings are protected by a spring guard.

Swivel Both Ends

Cat. No.	Hose Inside Diameter	Hose Length Max.	Hose Length Working Length	Hose Length Compact Size	Compact Outside Coil Diameter	Male NPT Fitting
N14-12B	1/4"	12'	10'	6"	3-1/2"	1/4"
N14-25B	1/4"	25'	22'	10-1/2"	3-1/2"	1/4"
N14-50B	1/4"	50'	45'	21"	3-1/2"	1/4"
N38-124B	3/8"	12'	10'	5"	5-5/8"	1/4"
N38-254B	3/8"	25'	21'	10-1/4"	5-5/8"	1/4"
N38-504B	3/8"	50'	44'	21"	5-5/8"	1/4"
N38-12B	3/8"	12'	10'	5"	5-5/8"	3/8"
N38-25B	3/8"	25'	21'	10-1/4"	5-5/8"	3/8"
N38-50B	3/8"	50'	44'	21"	5-5/8"	3/8"
N12-12B	1/2"	12'	9'	5"	9"	1/2"
N12-25B	1/2"	25'	18'	9"	9"	1/2"
N12-50B	1/2"	50'	41'	18"	9"	1/2"
N34-12B	3/4"	12'	10'	4-1/2"	12-1/2"	3/4"
N34-25B	3/4"	25'	17'	9"	12-1/2"	3/4"
N34-50B	3/4"	50'	35'	16"	12-1/2"	3/4"

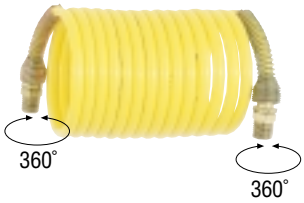

Swivel One End

Cat. No.	Hose Inside Diameter	Hose Length Max.	Hose Length Working Length	Hose Length Compact Size	Compact Outside Coil Diameter	Male NPT Fitting
N14-12A	1/4"	12'	10'	6"	3-1/2"	–
N14-25A	1/4"	25'	22'	10-1/2"	3-1/2"	1/4"
N14-50A	1/4"	50'	45'	21"	3-1/2"	1/4"
N38-12A	3/8"	12'	10'	5"	5-5/8"	3/8"
N38-25A	3/8"	25'	21'	10-1/4"	5-5/8"	3/8"
N38-50A	3/8"	50'	44'	21"	5-5/8"	3/8"
N12-12A	1/2"	12'	9'	5"	9"	1/2"
N12-25A	1/2"	25'	18'	9"	9"	1/2"
N12-50A	1/2"	50'	41'	18"	9"	1/2"

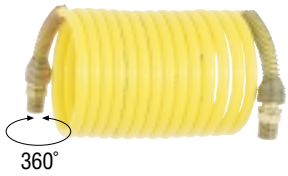

Rigid Couplings Both Ends

Cat. No.	Hose Inside Diameter	Hose Length Max.	Hose Length Working Length	Hose Length Compact Size	Compact Outside Coil Diameter	Male NPT Fitting
N14-12	1/4"	12'	10'	6"	3-1/2"	1/4"
N14-25	1/4"	25'	22'	10-1/2"	3-1/2"	1/4"
N14-50	1/4"	50'	45'	21"	3-1/2"	1/4"
N38-12	3/8"	12'	10'	5"	5-5/8"	3/8"
N38-25	3/8"	25'	21'	10-1/4"	5-5/8"	3/8"
N38-50	3/8"	50'	44'	21"	5-5/8"	3/8"
N12-12	1/2"	12'	9'	5"	9"	1/2"
N12-25	1/2"	25'	18'	9"	9"	1/2"
N12-50	1/2"	50'	41'	18"	9"	1/2"

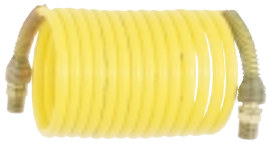

Bulk Hose

Cat. No.	Hose Inside Diameter	Hose Length Max.	Hose Length Working Length	Hose Length Compact Size	Compact Outside Coil Diameter	Male NPT Fitting
N14-100	1/4"	100'	90'	45"	3-1/2"	–
N38-100	3/8"	100'	85'	38"	5-5/8"	–
N12-100	1/2"	100'	75'	35"	9"	–
N34-100	3/4"	100'	70'	29"	12-1/2"	–

Fitting For Nylon Recoil Hose*

Fitting Kit Cat. No. Rigid	Fitting Kit Cat. No. Swivel	Hose Inside Diameter	Male NPT Fitting
RK090	RK092	1/4"	1/4"
–	RK114	3/8"	1/4"
RK110	RK112	3/8"	3/8"
RK118	RK119	1/2"	1/2"
–	CSM1212	3/4"	3/4"

Complete end comprising 5 items. Order two fittings per hose.

Accessories

P Series
Polyurethane Coiled Hose

- Superior elasticity and coil memory mean a clean work environment
- Outstanding flexibility increases operator comfort
- 25% lighter than rubber hose reduces operator fatigue
- Abrasion and kink resistance increases lifetime
- Tight coil diameter allows easy entry into confined spaces
- Non-Marring surface won't harm work pieces
- Broad chemical resistance makes it suitable for most environments
- Better than 80% working length extends your work space
- Straight tails on both ends eliminate workstation tangles
- Reusable MNPT fittings allow field retrofits
- Thread sealant on all fittings provides for leak free joints

P Series (Polyurethane Coiled Hose)

IR Part	*Description*
Polyurethane Coil Hose	
P14-10	1/4" x 10' Polyurethane Coil Hose, (1) 1/4" Rigid, (1) 1/4" Swivel Fitting
P14-20	1/4" x 20' Polyurethane Coil Hose, (1) 1/4" Rigid, (1) 1/4" Swivel Fitting
P14-30	1/4" x 30' Polyurethane Coil Hose, (1) 1/4" Rigid, (1) 1/4" Swivel Fitting
P38-10	3/8" x 10' Polyurethane Coil Hose, (1) 3/8" Rigid, (1) 3/8" Swivel Fitting
P38-20	3/8" x 20' Polyurethane Coil Hose, (1) 3/8" Rigid, (1) 3/8" Swivel Fitting
P38-30	3/8" x 30' Polyurethane Coil Hose, (1) 3/8" Rigid, (1) 3/8" Swivel Fitting
P12-10R	1/2" x 10' Polyurethane Coil Hose, (1) 1/2" Reusable Swivel Fittings
P12-20R	1/2" x 20' Polyurethane Coil Hose, (2) 1/2" Reusable Swivel Fittings
P12-30R	1/2" x 30' Polyurethane Coil Hose, (2) 1/2" Reusable Swivel Fittings
Fitting Kits	
P14-RMS	1/4" NPT Reusable Male Swivel Fitting Kit for 1/4" ID Polyurethane Hose
P38-RMS	3/8" NPT Reusable Male Swivel Fitting Kit for 3/8" ID Polyurethane Hose
P14-RMR	1/4" NPT Reusable Male Rigid Fitting Kit for 1/4" ID Polyurethane Hose
P38-RMR	3/8" NPT Reusable Male Rigid Fitting Kit for 3/8" ID Polyurethane Hose
P12-RFR	1/2" NPT Reusable Female Rigid Fitting Kit for 1/2" ID Polyurethane Hose
P12-RMS	1/2" NPT Reusable Male Swivel Fitting Kit for 1/2" ID Polyurethane Hose

125 PSIG Working Pressure @ 75˚F

Lubricants

Oils

Catalog Number	*Quantity*	*Recommended Use*
10Z4	4 oz.	
10P	Pint	All Automotive Air Tools
10G	Gallon	
10GW	Gallon	Winter Grade

Greases

Catalog Number	*Grease Number*	*Quantity (lbs./kg)*	*Recommended Use*
28 1 LB	28	1	Drills and Ratchet Wrenches
28 8 LB	28	8	Drills and Ratchet Wrenches
67 1 LB	67	1	Angle Grinders, Angle Sanders, Angle Polishers
67 8 LB	67	8	Angle Grinders, Angle Sanders, Angle Polishers
100 1 LB	100	1	Impact Wrench Mechanisms
100 8 LB	100	8	Impact Wrench Mechanisms
115 1 LB	115	1	2131 Impact Wrench Only
105-4T-6	*	4 oz. tube	Impact Wrench Mechanisms of most Impact Tools and for assembly of 2131 Impact models
115-4T-6	*	4 oz. tube	For general maintenance on 2131 Impact Tool Mechanisms

** Package of 6 tubes*

Impact Tool Lubrication Kits

Catalog No.	*Contains*
67-LBK1	4oz. IR67 grease 4oz. IR10 oil GTH-1 grease tube gun
105-LBK1	4oz. IR105 grease 4oz. IR10 oil GTH-1 grease tube gun
115-LBK1	4oz. IR115 grease 4oz. IR10 oil GTH-1 grease tube gun

Metal Grease Gun

Catalog No.	*Capacity*	*Recommended Use*
ROOOA2-228	3oz.	For flush type fittings
GTH-1		For grease tubes

Blow Guns

- Designed to meet OSHA standards
- Available in standard, 6" and 12" lengths
- Cushioned thumb grip

600 Series

Multiple venturi holes maximize air volume while conforming to OSHA's requirements on compressed air. Used for cleaning.

600 Series

Part No.	*Description*
600-S	Standard Safety Blow Gun
600-SB	Booster Safety Blow Gun
606-S	Safety Blow Gun w/6" Extension
612-S	Safety Blow Gun w/12" Extension

8338 Series

Part No.	*Description*
8338-1	Safety Blow Gun with Cone of Air
8338-2	Safety Blow Gun with Rubber Tip
33970	10" Extension Tip for 8338 Series

8440 Series

Part No.	*Description*
8440	Safety Yellow, Lightweight, Polyester Blow Gun

Safety Extensions – Used on 600 Series

Part No.	*Description*
ST206	6" Safety Extension
ST212	12" Safety Extension

Blow Gun Tips – Used on 600 Series

Part No.	*Description*
ST10	Standard Safety Tip
ST11	Safety Air Booster Tip

1/4" NPT – Maximum Tip Pressure 30 psig per OSHA Requirement

ST206

ST212

ST11

ST10

600-S

600-SB

616-S 606-S

8338-1

8338-2

8440

Accessories

Accessories

Filters, Regulators, Lubricators

Your Ingersoll-Rand air tools will last longer with fewer problems or repair costs when you use the high quality filters, regulators, and lubricators specially made to match your tool.

Filters

IR compressed air filters are designed to remove airborne solid and liquid contaminants which can plug small orifices and affect performance, or cause excessive wear and premature equipment failure. Several types of filters are offered, including models with coalescing elements for removal of oil aerosols and particles down to .3 micron.

Regulators

IR air line regulators provide controlled, consistent air pressure as required for specific air equipment connected to the air system. They are designed to deliver the pressure you need, with precise control over outlet pressure. They help maintain relative torque and speed control, and also conserve compressed air.

Lubricators

IR fog-type lubricators help ensure that air equipment receives the required lubrication to maintain optimum performance, reduce wear, and extend life. They are designed to provide the correct amount of oil, with a constant ratio to CFM. Precise oil feed adjustment allows the proper oil delivery rate. Lubricators should be installed close to the downstream application to ensure effective distribution oil to the equipment.

Point of Purchase Display Packaging

All IR filters, regulators, and lubricators are available in clamshell-style packaging for easy, flexible display options and effective, self-selling graphics and copy. Designate by adding "-S" to the item model number.

Combination Units with Gauge

Size Female NPT (in.)	*Filter-Regulator-Lubricator*
1/4 Mini	C28121-820
1/4	C28221-810
3/8	C28281-810
1/2	C28241-810
3/4	C28-06-FKG0-28
1	C31-08-G00

Individual Units

1/8" Female NPT Miniature

Specifications	*Filter*	*Regulator*	*Lubricator*
Cat. Number	F25111-420	R-27111-600	L26111-120
Flow Rate	28 SCFM	13 SCFM	41 SCFM
Adj. Pres. Range	N/A	5-125 psig	N/A
Bowl Size	1.10 oz.	N/A	1.10 oz.
Bowl Type	Composite Nylon	N/A	Composite Nylon
Weight (lbs.)	1.48	1.38	1.50

1/4" Female NPT Miniature

Specifications	*Filter*	*Regulator*	*Lubricator*
Cat. Number	F25121-420	R27121-600	L26111-120
Flow Rate	38 SCFM	13 SCFM	41 SCFM
Adj. Pres. Range	N/A	5-125 psig	N/A
Bowl Size	1.10 oz.	N/A	1.10 oz.
Bowl Type	Composite Nylon	N/A	Composite Nylon
Weight (lbs.)	1.46	1.34	1.50

1/4" Female NPT

Specifications	*Filter*	*Regulator*	*Lubricator*
Cat. Number	F25221-410	R27221-600	L26221-110
Flow Rate	54 SCFM	100 SCFM	75 SCFM
Adj. Pres. Range	N/A	5-125 psig	N/A
Bowl Size	6.00 oz.	N/A	6.00 oz.
Bowl Type	Metal	N/A	Metal
Weight (lbs.)	1.48	1.38	1.50

3/8" Female NPT

Specifications	*Filter*	*Regulator*	*Lubricator*
Cat. Number	F25231-410	R27231-600	L26231-110
Flow Rate	100 SCFM	130 SCFM	100 SCFM
Adj. Pres. Range	N/A	5-125 psig	N/A
Bowl Size	6.00 oz.	N/A	6.00 oz.
Bowl Type	Metal	N/A	Metal
Weight (lbs.)	1.46	1.34	1.44

1/2" Female NPT

Specifications	*Filter*	*Regulator*	*Lubricator*
Cat. Number	F25241-410	R27241-600	L26241-110
Flow Rate	122 SCFM	150 SCFM	110 SCFM
Adj. Pres. Range	N/A	5-125 psig	N/A
Bowl Capacity	6.00 oz.	N/A	6.00 oz.
Bowl Type	Metal	N/A	Metal
Weight (lbs.)	1.43	1.30	1.36

3/4" Female NPT

Specifications	*Filter*	*Regulator*	*Lubricator*
Cat. Number	F28-06-SK00-28	R28-06-F0G0-28	L28-06-LK00-28
Flow Rate	168 SCFM	125 SCFM	200 SCFM
Adj. Pres. Range	N/A	5-125 psig	N/A
Bowl Capacity	2.87oz.	N/A	6.11oz.
Height (in.)	8.4	5.9	9.36
Width (in.)	2.9	2.9	2.39

1" Female NPT (metal bowls)

Specifications	*Filter*	*Regulator*	*Lubricator*
Cat. Number	F38-08-SH00-28	R38-08-F0G0-28	L38-08-LK00-28
Flow Rate	325 SCFM	491 SCFM	440 SCFM
Adj. Pres. Range	N/A	10-125 psig	N/A
Bowl Capacity	8oz.	N/A	19oz.
Height (in.)	11.46	7.83	10.67
Width (in.)	3.94	3.94	3.94

Combination Over/Under Filters-Regulators

Specifications	*1/8" Female NPT Miniature*	*1/4" Female NPT Miniature*
Cat. Number	P29114-620	P29124-620
Flow Rate	13 SCFM	13 SCFM
Adj. Pres. Range	5-125 psig	5-125 psig
Bowl Size	_ oz.	_ oz.
Bowl Type	Composite	Composite
Weight (lbs.)	2.05	2.03

Specifications	*1/4" Female NPT*	*3/8" Female NPT*	*1/2" Female NPT*
Cat. Number	P29224-610	P29234-610	P29244-610
Flow Rate	93 SCFM	135 SCFM	140 SCFM
Adj. Pres. Range	5-125 psig	5-125 psig	5-125 psig
Bowl Capacity	6.0 oz.	6.0 oz.	6.0 oz.
Bowl Type	Metal	Metal	Metal
Weight (lbs.)	2.05	2.03	2.00

TS-4000 Liquidator Tool Saver

Inline Series Filters-Regulators

1/4" Female NPT

Specifications	*Filter*	*Lubricator*
Cat. Number	F01-02-000	L01-02-000
Flow Rate	17 SCFM	22 SCFM
Bowl Capacity	N/A	.25 oz.
Height (in.)	2.5	3
Width (in.)	1	1-1/8 Hex

1/4" Female NPT

Specifications	*Filter*	*Lubricator*
Cat. Number	N/A	L01-03-000
Flow Rate	N/A	22 SCFM
Bowl Capacity	N/A	.25 oz.
Height (in.)	N/A	3
Width (in.)	N/A	1-1/8 Hex

Liquidator™ Filters/Dryers

All feature...

- Centrifugal spinning
- Stainless steel media
- Friction drying and filtered air to one micron
- Inverse flow
- Automatic drain

Inlet Size	*Part No.*	*Description*	*SCFM*
1/2" NPT	TS-4000	Liquidator Tool Saver	60
1/2" NPT	EAD-6000	Liquidator Prep Station Air Drier	60
1/2" NPT	PDS-2000	Liquidator Paint Booth Desiccant Drier System	25

Replacement Elements

Used On	*Stage*	*Part No.*	*Package Qty.*
EAD-6000	1st Stage	8844-060	Each
EAD-6000	2nd Stage	8844-060C	Each
PDS-2000	1st Stage	8844-460	Each
PDS-2000	2nd Stage	8844-DES	Each
PDS-2000	2nd Stage	8844-DES-6	Six
TS-4000	1st & 2nd	8844-060	Each

EAD-6000 Liquidator Prep Station Air Drier

PDS-2000 Liquidator Paint Booth Desiccant Drier System

Pullers and Hoists

P-Series Pullers

They'll pull up to 2,000 lbs. with no problem – and no hard work for you, either. Extremely strong and well-made, the Ingersoll-Rand P-Series are high quality, dependable wire rope pullers for low- and medium-duty pulling and lifting jobs.

- Made for superior strength, with a steel frame and handle, alloy steel load hook, one-piece cast aluminum drum, and solid steel drive and holding dog
- 4:1 design factor for lifting or pulling
- Long-lasting gears through IR's extra heavy "Buttress Tooth" design

I-R Number	No. of Lines	Rated Capacity	Min. Dist. Bet. Hooks 'A' Dimen. (in.)	Lifting Dist. (ft.)	Cable Dia. (in.)	No. of Hooks	Net wt. (lbs.)
P15HA	Single	1,000	18	15	3/16	2	8
P15D3HA	Single	1,000	18	15	3/16	3	10
	Double	2,000	24	71/2	3/16	3	10
PR-25A	Single	1,100	24	23	5/8	2	10.8
PR-75A	Single	1,100	24	73	5/8	2	17.4

C-Series Pullers

The C-Series includes rugged cast aluminum wire rope pullers designed to store more wire rope than all-steel ratchet pullers. Rigged double line, they handle those long reach pulling or lifting jobs up to 3,400 lbs. with no problem.

- Extremely strong, with a solid cast steel drive and holding dog
- Heavy duty cast aluminum drum and lightweight aluminum frame. The load hook is alloy steel with safety latches

"One notch at a time" lowering is assured by the ratchet and pawl system. The gear teeth are IR's "Buttress Tooth" design for additional strength and longer gear life.

I-R Number	No. of Lines	Rated Capacity	Min. Dist. Bet. Hooks 'A' Dimen. (in.)	Lifting Dist. (ft.)	Cable Dia. (in.)	No. of Hooks	Net wt. (lbs.)
C400HA	Single	1,700	17	20	1/4	3	16
	Double	3,400	22	10	1/4	3	16
C400SA	Single	2,000	17	12	3/32 x 1 7/8	2	16
	Double	4,000	22	6	3/32 x 1 7/8	3	16

P-Series Pullers C-Series Pullers

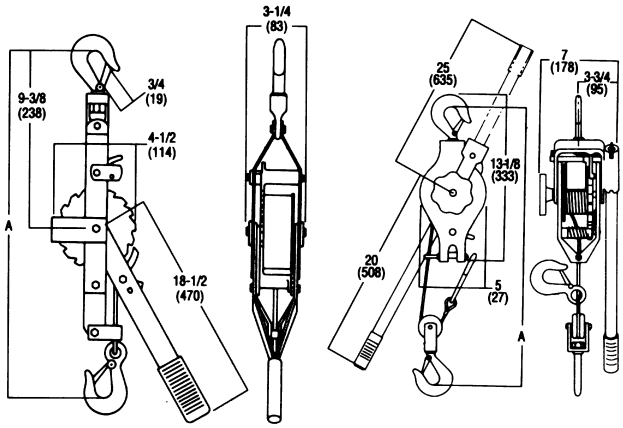

PT-8-Trolley Series

Plain 1/2 to 5 Metric Ton

A plain trolley rated for both manual or powered hoists, with the versatility to fit most types of beams...with options and prices you won't believe.

Standard features:

- The 5:1 design factor allows the PT Series to be used with both manual or powered hoists. Meets pertinent U.S. (ASME/ANSI and CMAA), Canadian and European standards
- The side plates, including the rail sweeps/drop stops, are made of cold formed steel for strength, durability and even load distribution
- The wheel axles are "rivet-locked" in place so they won't come loose. They are NOT knurled, welded or modified bolts.
- The wheels are cast iron. The "universal" tread fits either flat or tapered beams
- Wheels run on sealed, "lubed-for-life" ball bearings. Smoother rolling with less effort and...less maintenance
- Wide hanger shaft assemblies allow the PT Series trolley to fit almost any I-Beam, H-Beam or patented track beam up to 8.06 in./205mm width
- PT Series trolley hanger shafts are designed to accept all hoist brands. The hanger shaft has a "squared out" recess to accept round or squared hook shapes. The trolleys are painted black for universal coordination
- PT Series trolleys are made in the U.S.A.

PT Series Trolley

PT Trolley Dimensions

Model Number	A in.	A mm	A_1[c] in.	A_1[c] mm	B in.	B mm	C in.	C mm	D in.	D mm	E in.	E mm	F in.	F mm	G in.	G mm	H in.	H mm
PT005-8A	2.50	64	6.125	156	10.00	254	4.50	114	1.00	25	4.00	102	1.12	29	3.43	87	2.25	57
PT010-8A	2.47	63	6.125	156	12.63	321	5.56	141	1.12	29	4.38	111	1.62	41	4.06	103	2.75	70
PT020-8A	2.47	63	6.06	154	14.88	378	6.50	165	1.18	30	5.18	133	131	33	5.75	146	4.25	108
PT030-8A	2.59	66	8.50	216	14.12	358	6.50	165	1.62	41	5.43	138	1.62	41	5.75	146	4.25	108
PT050-8A	2.56	73	8.50	216	15.44	392	6.75	171	1.31	41	5.75	146	2.25	57	6.18	157	4.38	111

Model Number	J in.	J mm	K in.	K mm	L in.	L mm	M[y] in.	M[y] mm	N[y] in.	N[y] mm	P_1[c] in.	P_1[c] mm	R in.	R mm	S in.	S mm
PT005-8A	.88	22	.75	19	6.00	154	1.06	27	3.94	100	12.25	311	1.25	32	1.63	41
PT010-8A	.88	22	1.00	25	6.88	175	1.45	37	4.20	107	12.87	327	1.50	38	1.63	41
PT020-8A	1.25	32	1.18	30	7.50	191	.94	24	4.31	110	13.80	335	1.50	38	1.63	41
PT030-8A	1.25	32	1.43	37	8.50	216	1.62	41	5.38	137	14.12	359	2.00	51	2.56	65
PT050-8A	1.62	41	1.43	37	9.75	248	1.62	41	6.62	168	15.63	397	2.50	64	2.56	65

Specifications: PT-8 "Contractor" Series with Single 8" (205mm) Hanger Shaft

Base Trolley Model	Trolley Capacity tons	Trolley Capacity lbs	Trolley Capacity kg	Fits beam flange width in.	Fits beam flange width mm	Beam Height[y] in.	Beam Height[y] mm	Curve radius[y] in.	Curve radius[y] mm	Net weight lbs	Net weight kg
PT005-8A	0.5	1100	500	2.66-8.06	68-205	4.0	102	36	914	20	9
PT010-8A	1.0	2200	1000	3.00-8.06	76-205	5.0	127	36	914	31	14
PT020-8A	2.0	4400	2000	3.33-8.06	85-205	6.0	152	48	1219	56	25
PT030-8A	3.0	6600	3000	4.00-8.06	102-205	8.0	203	60	1524	76	35
PT050-8A	5.0	11000	5000	4.66-8.06	118-205	10.0	254	60	1524	113	51

y Minimum dimension
c Dimension for standard shaft length only

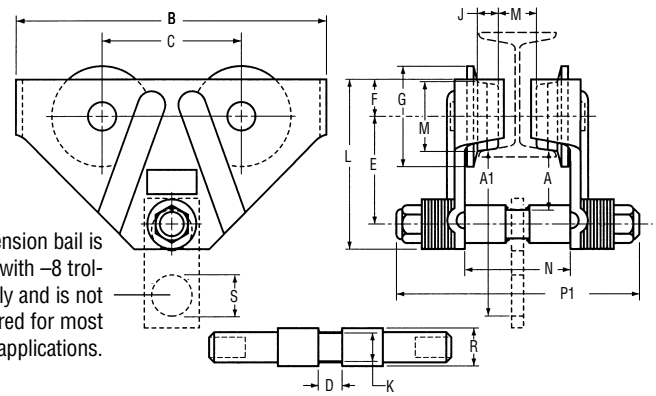

Suspension bail is supplied with –8 trollies only and is not required for most applications.

Pullers and Hoists – Silver Series

SL Lever Chain Hoist

3/4 – 6 Metric Ton Lifting Capacity

Give us a place to stand and we'll help you move the earth.

Archimedes' principle of leverage is improved yet again in the Silver Series Lever Chain Hoist. Meeting ANSI/ASME B30.16 and all pertinent world standards, the "-E" signifies compliance with Europe's EC95 Machinery Directive.

The patent pending "Arrow-Notch" free chain system is simple and reliable. Just one hand turns the indicator and operators will enjoy the easiest free chaining we have ever tested. Try to operate an SL in free chain mode and the brake instantly engages, holding the load, minimizing the risk of an accident.

Silver Series has a zinc-nickel-chrome plated finish. It's more durable and corrosion resistant than paint. Looks great too.

Plus the SL has the quality features you expect from Ingersoll-Rand.

- All steel construction
- 360 degree handle rotation
- Rubber handle grip in all sizes
- Reliable disc brake
- Premium grade alloy chain
- Hardened swivel-latch hooks
- Light weight
- Low handle force
- Short handle stroke
- Standard lifts of 5, 10, 15 and 20 feet

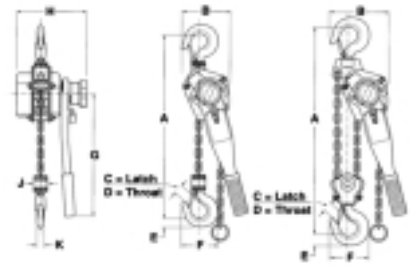

SL Series Dimensions

Model	A "Min."		B		C		D		E		F		G		H		J		K	
	in.	mm	in.	mm	in.	mm	in.	mm	in.	mm	in.	mm	in.	mm	in.	mm	in.	mm	in.	mm
SL100-L-EA	11.6	295	3.6	91	.91	23	1.03	26	.81	21	3.03	77	11.2	285	4.9	125	1.03	26	.54	14
SL150-L-EA	12.6	320	5.5	140	.952	24	1.1	27	.86	22	3.5	89	10.6	270	6.3	160	1.3	34	.62	16
SL200-L-EA	13.1	333	4.3	109	1.05	27	1.19	30	1.04	26	3.70	94	11.2	285	6.3	160	1.24	32	.63	16
SL300-L-EA	14.8	375	7.1	180	1.2	30	1.3	34	1.1	29	4.2	108	15.4	390	7.7	195	1.6	40	.80	21
SL600-L-EA	18.7	475	8.66	220	1.55	39	1.7	42	1.5	39	5.5	139	15.4	390	8.7	220	1.9	47	1.1	28
SL1200-L-EA	24	610	10.2	260	1.6	41	1.9	47	1.8	45	6.3	160	15.4	390	8.7	220	2.5	64	1.3	34

How to order:
Specify lift in feet in the L position of model #.

Example:
SL150-15-EA = 3/4 ton, with 15 ft. of lift.

5, 10, 15 and 20 feet lifts standard.

Base Model	Capacity			Pull to lift rated load		Chain falls	Load chain size	Wt. of chain for extra lift		Hoist net wt. with std. 1.5m (5 ft) of lift	
	metric ton	lbs	kg	lbs	kg		mm	lbs/ft	kg/m	lbs	kg
SL100-L-EA	1/2	1100	500	77	35	1	5 x 15	0.36	0.53	11	5.0
SL150-L-EA	3/4	1650	750	68	31	1	6 x 18	0.53	0.79	15	7
SL200-L-EA	1/2	2200	1000	64	29	1	6 x 19	0.53	0.78	16	7.3
SL300-L-EA	1 1/2	3300	1500	73	33	1	7.1 x 21	1.73	1.10	24	11
SL600-L-EA	3	6600	3000	75	34	1	10 x 30	1.48	2.20	44	20
SL1200-L-EA	6	13200	6000	81	37	2	10 x 30	2.95	4.40	66	30

SMA Manual Chain Hoist

1/2 – 5 Metric Ton Lifting Capacity

A NEW design for the year 2000 workplace with safety and performance in mind. Meets or exceeds world specifications including ASME B30.16. A value-packed product with premium features at a great price.

The SMA has the quality features you expect from Ingersoll-Rand.

- Overload Protections to deter and reduce downtime and repair costs resulting from abuse
- All steel, low headroom, light weight construction
- Self-adjusting disc type double pawl mechanical load brake
- Hardened roller bearings for maximum efficiency and durability
- Improved 4 layer finish of nickel, copper, nickel, and chrome complementing our Silver Series lever hoist companion product
- Standard lift (L) is 10 feet. Hand chain drop (D) is 2 feet less than lift (unless specified)
- Replaces previous SM series models

Comes Standard with Overload Protection

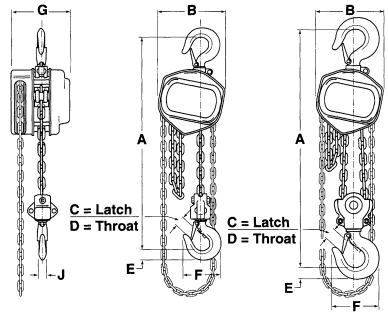

SMA Series Dimensions

Model	A "Min." in.	A "Min." mm	B in.	B mm	C in.	C mm	D in.	D mm	E in.	E mm	F in.	F mm	G in.	G mm	H in.	H mm	J in.	J mm
SM005-L-D-VA	11.6	295	5.3	135	.82	21	.85`	22	.60	15	2.8	71	4.2	107	1.0	26	.59	15
SM010-L-D-VA	13	330	5.7	145	1.0	26	1.1	28	.78	20	3.6	92	5.1	129	1.3	32	.75	19
SM015-L-D-VA	16.1	410	7.6	193	1.1	27	1.2	30	.97	25	4.1	105	5.8	147	1.4	36	.87	22
SM020-L-D-VA	17.7	450	5.7	145	1.2	30	1.3	32	1.1	28	4.5	113	5.1	129	1.9	48	.98	25
SM030-L-D-VA	20.7	525	7.6	193	1.4	35	1.5	37	1.4	35	5.1	130	5.8	147	2.2	56	1.1	29
SM050-L-D-VA	24	610	8.3	210	1.5	39	1.7	42	1.7	43	5.9	150	6.6	168	2.7	68	1.3	34

How to order:
Specify lift (L) and hand chain drop (D) in feet.

Example:
SMA030-10-8-VA = 3 ton, with 10 ft. of lift, 8 ft. of drop.

Standard with S•COR•E hand chain and Overload Protection (V).

SMA Series Specifications

Base Model	Capacity metric ton	Capacity lbs	Capacity kg	Pull to lift rated load lbs	Pull to lift rated load kg	Hand chain overhauled to lift 1 ft	Hand chain overhauled to lift 0.3 m	No. of chain falls	Load chain size mm	Net wt. of chain lbs per lbs/ft	Net wt. of chain kg per lbs/ft	Hoist net wt. with std. 3m (10 ft) of lift lbs	Hoist net wt. with std. 3m (10 ft) of lift kg
SMA005-L-D-VA	1/2	1100	500	48	22	25	7.6	1	6.3 x 18	0.55	0.82	18	8
SMA010-L-D-VA	1	2200	1000	75	34	39	11.9	1	6.3 x 18	0.55	0.82	26	12
SMA015-L-D-VA	1 1/2	3300	1500	84	38	58	17.7	1	8.0 x 24	0.80	1.19	39	18
SMA020-L-D-VA	2	4400	2000	81	36	75	22.9	2	6.3 x 19	1.10	1.64	35	16
SMA030-L-D-VA	3	6600	3000	90	40	116	35.4	2	8.0 x 24	1.60	2.38	55	25
SMA050-L-D-VA	5	11000	5000	97	43	187	57.0	2	10.0 x 30	1.40	2.08	86	39

One metric ton = 2200 lbs./One meter = 3.28 ft.

Warranty Information

The Ingersoll-Rand Warranty, Your Assurance of Top Quality

Your Ingersoll-Rand tools are constructed using the finest designs and materials to deliver power and performance by design.

As an automotive professional, you know how important it is to lubricate your tools and check them regularly. With simple, routine care, your tools will give you years of trouble-free service, backed by the Ingersoll-Rand warranties which come with every tool you buy.

One Year Limited Warranty

Ingersoll-Rand Company (the "Company") warrants to the original user the automotive power tools (the "Product") to be free of defects in material and workmanship for a period of 1 year from the date of purchase by such user. The Company shall, at its option, either repair or replace, free of charge, any Product found, upon the Company's inspection, to be so defective, or if agreed upon, refund the purchase price, less a reasonable allowance for depreciation, in exchange for the Product. For this warranty to be effective: (i) the Company must be notified within the 1 year period by return of any alleged defective Product free and clear of all liens and encumbrances to the Company or its authorized warranty service distributor, transportation prepaid; (ii) the Product must not have been abused, misused or improperly maintained and/or repaired during such period; and (iii) such defect must not have been caused by ordinary wear and tear. THE COMPANY MAKES NO OTHER WARRANTY, AND ALL IMPLIED WARRANTIES INCLUDING ANY WARRANTY OF MERCHANTABILITY OR FITNESS FOR A PARTICULAR PURPOSE ARE LIMITED TO THE DURATION OF THE EXPRESSED WARRANTY PERIOD AS SET FORTH ABOVE. THE COMPANY'S MAXIMUM LIABILITY HEREUNDER IS LIMITED TO THE PURCHASE PRICE OF THE PRODUCT. IN NO EVENT SHALL THE COMPANY BE LIABLE FOR ANY CONSEQUENTIAL, INDIRECT, INCIDENTAL OR SPECIAL DAMAGES OF ANY NATURE ARISING FROM THE SALE OR USE OF THE PRODUCT, WHETHER IN CONTRACT, TORT OR OTHERWISE.

NOTE:

Some states do not allow limitations on incidental or consequential damages or how long an implied warranty lasts so that the above limitations may not apply to you. This warranty gives you specific legal rights and you may also have other rights which may vary from state to state.

Operation & Maintenance

Air Tool Operation and Maintenance

Ingersoll-Rand air tools are rugged and long wearing, built to take continual punishment in the roughest service. But even the toughest air tool can't protect itself against continued neglect or misuse. You can get your money's worth in performance and service by following these simple operation and preventative maintenance suggestions:

1. Keep tools clean and lubricated. When you've finished using them at the end of the day, put a teaspoon of oil in the air inlet and operate the tool briefly to circulate the oil through the tool. It will protect the tool from rust until it's used the next day.

2. Air tools need clean air. Dust, corrosive fumes, and excessive moisture can all wreck the mechanism of an air tool. An inline filter and lubricator can greatly increase the life of an air tool. The filter removes the dust and moisture while the lubricator meters the proper amount of lubrication to the tool for top performance.

3. Low air pressure reduces the speed of all air tools. It also wastes mechanic's time and causes expensive delays. Be sure that your air system is properly designed to deliver a minimum of 90 PSI at the tool inlet with the tool running.

4. Have your air tool checked regularly. You have your car inspected from time to time — do the same for your tools. Service and Parts Distributors provide repair service that will bring tools up to original performance capacity.

5. Use proper hose and fittings. They are essential for top performance of your air tools. An otherwise adequate compressor can be choked if the wrong piping and fittings are used in the piping system.

6. Never use hand sockets with air or electric impact wrenches. Chrome hand sockets are "glass hard" and can shatter under the tremendous energy in today's high performance air impact wrenches. People have been seriously injured when using chrome sockets on power tools.

7. Always match the speed rating of an accessory with the tool speed. Overspeeding an accessory is just plain dangerous.

8. Wear safety glasses when using any power tools. Never take any risks with your eyes.

Electric Tool Operation and Maintenance

You've invested in your electric tools because they can help you work better and faster. To get maximum performance from the tools, you should use them properly and give them the care they need. Reasonable care and simple
preventative maintenance will pay off in increased tool efficiency and longer service.

General. Don't overload electric tools. Use the tool that's rated for the job you're doing. Carry the tool by the handle instead of dragging it by the cord. It's bad for the cord and might also damage the housing.

Proper Voltage. Always make sure that you are operating your electric tool within the voltage range recommended. The proper voltage ranges for Ingersoll-Rand electric tools based on their rated voltage are shown in the
following table. The tools labeled for these voltages will operate efficiently
over these voltage ranges:

120 volt-range 110 to 125 volts

Servicing Instructions. All repairs and maintenance of the electrical components, armature, field brushes, switches, and cords of either double insulated or three-wire grounded tools must be performed by a Service and Parts Distributor.

Reference U.L. 45, Standard for Portable Electric Tools, Par 27.2.

Grounding. All Ingersoll-Rand electric tools (except double-insulated models) are equipped with three-conductor cords. When using an extension cord, you should make sure it has a grounding conductor and three-wire grounding type connector. Grounding adapters are provided with the tool when specified. To use the adapter, first determine if the system is grounded. If the electrical system is grounded, connect the green wire of the adapter to a mounting screw of the receptacle. For ungrounded electrical systems, attach the green wire to a known permanent ground. CAUTION: Water pipes are sometimes isolated from ground by insulated water meters.

Lubrication. Follow the instructions packed with the tool for proper lubrication. Change gear case lubricant at the intervals recommended. Clean lubricant keeps gear wear to a minimum. If the bearings are lubricated through a fitting, use a collapsible tube of lubricant. Do not use a high pressure grease gun. Apply lubricant sparingly; if the bearings are packed too full, they will run hot.

Ventilation. Motor housings on electric tools are designed to allow free passage of cooling air. The inlet and outlet air passages must be kept clear to ensure that the motor runs cool. Accumulated dust should be blown out of the motor frame with an air jet.

Service and Parts Distributors (USA)

Alabama
Alabama Jack Co.
1140 5th Avenue North
Birmingham, AL 35203
Telephone: (205) 251-8156
Fax: (205) 323-4367
1-800-749-5225

Tool Specialty
141 Commerce Court
Pelham, AL 35124
Telephone: (205) 733-9292
Telephone: (800) 554-4516
Fax: (205) 733-9299

Arizona
Desert Tool Service
663 W. 2nd Avenue Suite 18
Mesa, AZ 85210
Telephone: (480) 649-5963
Fax: (480) 649-5439

Mechanics Tool Service
1301 Apache Park Place
Tucson, AZ 85714
Telephone: (520) 889-8484
Fax: (520) 889-8668

Superior Tool
1430 North 27th Avenue
Phoenix, AZ 85009
Telephone: (602) 272-9211
Fax: (602) 272-9228

Arkansas
Air Power, Inc.
11000 East Otter Creek
Mabelvale, AR 72103
Telephone: (501) 455-6116
Fax: (501) 455-5504

California
Fejes Tool Services
139 W. Victoria Street
Gardena, CA 90248
Telephone: (310) 515-1800
Fax: (310) 515-4751

Jack X Change
1609 N. Orangethrope Way
Anaheim, CA 92801
Telephone: (714) 871-4966
Fax: (714) 871-4591

Kimmerle Brothers
337 M Street
Fresno, CA 93721
Telephone: (209) 233-1278
Fax: (209) 233-4678

Kimmerle Brothers
226 11th Street
San Francisco, CA 94103
Telephone: (415) 431-1163
Fax: (415) 431-1693

Kimmerle Brothers
12060 East Florence
Santa Fe Springs, CA 90670
Telephone: (310) 946-6771
Fax: (310) 444-3473

Quality Air Tool Repair
10734 Kenney Street #C
Santee, CA 92071
Telephone: (619) 258-5817
Fax: (619) 258-8982

Colorado
A Pro Tool
1950 W. 13th Avenue #2
Denver, CO 80204
Telephone: (303) 623-3743
Fax: (303) 623-7422

Connecticut
Air Tool Sales & Service
1 Burnham Avenue
Unionville, CT 06085
Telephone: (860) 673-2714
Fax: (860) 675-8148

Florida
Nestor Precision Tool Company
7337 Bryan Dairy Road
Largo, FL 33777
Telephone: (727) 544-6114
Fax: (727) 544-6211

Reliable Tool Service
6970 Wallis Road
West Palm Beach, FL 33413
Telephone: (561) 689-1676
Fax: (561) 689-1644

Tool Shack, Inc.
226 South Edgewood Avenue
Jacksonville, FL 32254
Telephone: (904) 387-1466
Telephone: (800) 525-6388
Fax: (904) 384-8120
E-mail: mike@tool-shack.com
Website: tools@tool-shack.com

Tool Repair Depot
6501 Orange Drive
Davie, FL 33314
Telephone: (954) 797-8998
Fax: (954) 583-2226

Georgia
Quality Air Tool Repair
370 Great Southwest Parkway
Suite C & D
Atlanta, GA 30336
Telephone: (404) 505-9114
Fax: (404) 505-9115
Website: www.qualityairtool.com

Tool Service Company
249 Alexander Street NW
Atlanta, GA 30313
Telephone: (404) 524-4249
Fax: (404) 688-6354
E-Mail:
toolserviceco@mindspring.com
Website: www.toolserviceco.com

Hawaii
All-Trade Supply
73-5563 Maiau Street
Kailua-Kona, HI 96740
Telephone: (808) 329-0516

Idaho
Boise Power Tool
121 E. 44th Street - Suite C
Boise, ID 83714
Telephone: (208) 323-9931
Fax: (208) 323-9942

Illinois
Illinois Tool Service
1485-J Landmeier Road
Elk Grove, IL 60007
Telephone: (847) 228-1902
Fax: (847) 228-1913

J&R Hydraulic
3616 S. Archer
Chicago, IL 60609
Telephone: (773) 247-6107
Fax: (773) 247-8681

Indiana
Southern Indiana Tool Repair
100 North Ewing Street
Seymour, IN 47274
Telephone: (812) 522-8961
Fax: (812) 523-8363

Tool Repair Service Company
919 North East Avenue
Indianapolis, IN 46202
Telephone: (317) 632-1594
Fax: (317) 632-2267

Iowa
Ace Tool Co./AIM Supply
7420 University Avenue
Des Moines, IA 50325
Telephone: (515) 274-3724
Fax: (515) 274-3725

Kansas
Clark's Tool
10228 W. Shawnee Mission Parkway
Shawnee, KS 66203
Telephone: (913) 268-1271
Fax: (913) 268-1328

Kentucky
Smiley's Air Tools
4552 Poplar Level Road
Louisville, KY 40213
Telephone: (502) 966-3433
Fax: (502) 966-3910

Louisiana
Beerman Precision
Machine Works, Inc.
4206 Howard Avenue
New Orleans, LA 70125
Telephone: (504) 486-9391
Fax: (504) 486-7482

Shreveport Air Tool, Inc.
125 Freestate Boulevard
Shreveport, LA 71107-7841
Telephone: (318) 227-9412
Fax: (318) 227-0013

Tool Service
953 Louisiana Avenue
Shreveport, LA 71107
Telephone: (318) 222-9249 or
Telephone: (800) 333-2853
Fax: (318) 221-0667

Massachusetts
Panda Electrical Service
165-169 Main Street
Everett, MA 02149
Telephone: (617) 389-1442
Fax: (617) 389-6823

Somerset Jack
114 Broadway
Somerville, MA 02145
Telephone: (617) 623-9599
Fax: (617) 623-0376

Michigan
Gezon Tool Service, Inc.
322 Rumsey S.W.
Grand Rapids, MI 49503
Telephone: (616) 451-2725
Fax: (616) 451-2728

K-Repairs
3111 Wixom Road
Wixom, MI 48393
Telephone: (248) 669-5000
Fax: (248) 669-5015

Re Nu Electric
20163 John R.
Detroit, MI 48203
Telephone: (313) 366-1570
Fax: (313) 366-1728

Minnesota
Delegard Tool
7864 12th Avenue South
Bloomington, MN 55420
Telephone: (952) 881-8683
Fax: (952) 881-6656

Reed's Sales and Service
1260 Payne Avenue
St. Paul, MN 55101
Telephone: (651) 774-9515

Missouri
Authorized Equipment Co.
3200 Chouteau Avenue
St. Louis, MO 63103
Telephone: (314) 772-8024

Clark's Tool
817 W. 40 Hwy
Blue Springs, MO 64015
Telephone: (816) 228-9885
Fax: (816) 228-2062

GEBCO Tools
2306 North Linbergh
St. Louis, MO 63114
Telephone: (314) 426-4440
Fax: (314) 426-3386

Nebraska
Thacker Electric
8517 "I" Street
Omaha, NE 68127
Telephone: (402) 592-9433
Fax: (402) 592-3768

Nevada
Discount Tool Repair
3343 Losee Road #1
Las Vegas, NV 89030
Telephone: (702) 657-6570
Fax: (702) 657-8022

New Hampshire
ADM Tool
91 Maple Street
Manchester, NH 03103
Telephone: (603) 623-8724
Fax: (603) 623-2975

New Jersey
Bergen Pneumatic
323 Hudson Street
Hackensack, NJ 07601
Telephone: (201) 488-2606
Fax: (201) 488-7592

Hillside Tool
280 Midland Avenue
Saddle Brook, NJ 07663
Telephone: (201) 791-6112
Fax: (201) 791-2699

New Mexico
Santa Fe Tool Company
9307 Central, N.E.
Albuquerque, NM 87123
Telephone: (505) 294-5000
Fax: (505) 292-7134

New York
Ace Hydraulics and Pneumatics
6720 V.I.P. Parkway
Syracuse, NY 13211
Telephone: (315) 454-8989
Fax: (315) 455-9522

Air Tool Repair
160 Holtz Drive
Cheektowaga, NY 14225
Telephone: (716) 631-9010
Fax: (716) 634-5520

Byrne Compressed Air
796 E. 140th Street
Bronx, NY 10454
Telephone: (718) 292-7726
Fax: (718) 993-3376

Five Boro Pneu Tronics
798 E. 43rd Street
Brooklyn, NY 11210
Telephone: (718) 338-8911
Fax: (718) 338-8914

NY Tech Supply
2424 Syracuse-Cortland Road
P.O. Box 180
LaFayette, NY 13084
Telephone: (315) 677-3828
Fax: (315) 677-9152

United Electric Motors
106 Michigan Avenue
Buffalo, NY 14204
Telephone: (716) 855-1945
Fax: (716) 852-2589

North Carolina
Portable Tool Service
3209 Cullman Avenue
Charlotte, NC 28206
Telephone: (704) 332-3578
Fax: (704) 375-1080
E-Mail: porttoolserv@hotmail.com
Website: www.mainstreet-stores.com
/portabletoolservice

Quality Air Tool Repair
2529 Oneida Road
Charlotte, NC 28269
Telephone: (704) 598-3498
Fax: (704) 598-3499
Website: www.qualityairtool.com

Quality Air Tool Repair
1040-107 Corporation Parkway
Raleigh, NC 27610
Telephone: (919) 212-1500
Fax: (919) 212-1537
Website: www.qualityairtool.com

BSR/HM Hurd Pit Tools
4030Concord Parkway South
Concord, NC 28027
Telephone: (704) 795-2701
Fax: (704) 795-6768
E-Mail: bsrprod@ix.necom.com
Website: www.bsrproducts.com

Ohio
Tri County Power Tool, Inc.
4597 Pearl Road
Cleveland, OH 44109
Telephone: (216) 398-6120
Telephone: (866) 873-8278
Fax: (216) 398-6121

Central Ohio Power Tools
1042 Dublin Road
Columbus, OH 43215
Telephone: (614) 481-2111
Fax: (614) 481-2112
E-Mail: sales@coptool.com
Website: www.coptool.com

Independent Equipment
5415 Gallia Street
Sciotoville, OH 45662
Telephone: (614) 776-2154
Fax: (614) 776-2429

Power Tool Repair, Inc.
891 Moe Drive, Suite H
Akron, OH 44310
Telephone: (330) 630-0022
Fax: (330) 630-3320
Website: powertoolrepair@aol.com

Oklahoma
Allied Tool Repair & Supply
8911 E. Admiral Place
Tulsa, OK 74115
Telephone: (918) 836-3939
Fax: (9118) 836-4143

Hydraulic Equipment Company
515 South Broadway
P.O. Box 25157
Oklahoma City, OK 73125
Telephone: (405) 235-3318

Oregon
Charles H. Day Co., Inc.
602 S.E. 11th Avenue
Portland, OR 97214
Telephone: (503) 232-1659
Fax: (503) 232-9821

Pennsylvania
C and E Pneumatic Service
301 Poplar Street
Hanover, PA 17331
Telephone: (717) 632-5200
Fax: (800) 830-6146

Ideal Tool Service
456 North Street
Philadelphia, PA 19123
Telephone: (215) 925-0672
Fax: (215) 440-9786

Mac's Hydraulic Jack
& Equipment Service
121 Putnam Street
Pittsburgh, PA 15206
Telephone: (412) 361-1555
Fax: (412) 361-2855

Power Tool Service
38 West Allen Street
Mechanicsburg, PA 17055
Telephone: (717) 697-8233
Fax: (717) 697-7256

Tri State Air Tool Repair
54 Sharpsville Road
Sharon, PA 16146
Telephone: (724) 346-3440
Fax: (724) 346-1225

Rhode Island
Tri-Power Sales & Service
64 Minnesota Avenue
Warwick, RI 02888
Telephone: (401) 732-3390
Fax: (401) 732-3930

South Carolina
Quality Air Tool Repair
2922 Republic Avenue
Florence, SC 29501
Telephone: (843) 395-1999
Fax: (843) 395-1955
Website: www.qualityairtool.com

Tennessee
Authorized Equipment Service
812 Polk
Memphis, TN 38126
Telephone: (901) 774-0850
Fax: (901) 942-9487

Herman's Tool Repair
5917 Clinton Highway
Knoxville, TN 37912
Telephone: (865) 688-3843
Fax: (865) 688-9708

Jones Tool Service
1314 Madison Avenue
Memphis, TN 38104
Telephone: (901) 726-0191
Fax: (901) 725-5545

Power Tool Service
1105 Elm Hill Pike - Suite 130
Nashville, TN 37201
Telephone: (615) 255-8227
Fax: (615) 254-8229

Texas
Air & Electric Tool Co.
3301 S. Grove
Fort Worth, TX 76110
Telephone: (817) 921-0231
Fax: (817) 927-5538

Gordon's Equipment
31 North Old Spanish Trail
Uhland, TX 78640
Telephone: (512) 376-6669
Fax: (512) 398-3192

Hydraulic Equipment Service
328 Avenue H
Lubbock, TX 79401
Telephone: (806) 763-7621
Fax: (806) 763-4209

Power Tool Service
3718 Polk
Houston, TX 77003
Telephone: (713) 228-0100
Fax: (713) 228-0619
(800) 327-2156

Reliable Tool Service, Inc.
2360 E. Grauwyler
Irving, TX 75061
Telephone: (972) 871-1945
Fax: (972) 870-0341

Sankey Equipment Company
925 Avenue "B"
San Antonio, TX 78215
Telephone: (210) 227-4178
Fax: (210) 228-0377

Wesbrooks, Inc.
Box 534
2012 Sheppard Access
Wichita Falls, TX 76304
Telephone: (940) 723-4181
Fax: (940) 723-4190

Utah
HK Power Tool
1726 Major
Salt Lake City, UT 84115
Telephone: (801) 487-9848
Fax: (801) 487-9840

Virginia
Hydraulic Service Co., Inc.
3215 Victory Boulevard
Portsmouth, VA 23702
Telephone: (757) 487-2513
Fax: (757) 487-4381
E-Mail: sales@hydraulicservice.com
Website: www.hydraulicservice.com

Washington
Air & Electric Tool
East 5518 Sprague
Spokane, WA 99212
Telephone: (509) 534-3698
Fax: (509) 534-3752

Universal Repair Shop
1611 Boylston Avenue
Seattle, WA 98122
Telephone: (206) 322-2726
Fax: (206) 322-2126

West Virginia
Air-Tech Tool Service, Inc.
325 City Avenue
Beckley, WV 25801
Telephone: (304) 253-6799
Fax: (304) 253-7706

Wisconsin
Power Tool Service
310 North Webster Avenue
Green Bay, WI 54301
Telephone: (414) 437-2594
Fax: (414) 432-0726

Professional Tool Center
2236 South 116th Street
West Allis, WI 53227
Telephone: (414) 321-1234
Fax: (414) 543-1741

Contact Information

United States

Marketing/Sales Headquarters
Ingersoll-Rand Productivity Solutions
1467 Route 31 South
Annandale, NJ 08801

Distribution Center
510 Hester Drive
White House, TN 37188
Telephone: (615) 672-0321
Fax: (615) 672-7679

Canada

Marketing, Sales, Parts & Distribution Centre
Ingersoll-Rand Canada Inc.
51 Worcester Road
Toronto, Ontario M9W 4K2
Telephone: (416) 213-4500
Fax: (416) 213-4510

Customer Service
Toll Free Tel: (877) 999-9073
Toll Free Fax: (888) 422-2258
Local Fax: (416) 213-4506

Latin America

Marketing/Sales/Service Headquarters
Ingersoll-Rand Company
730 N.W. 107th Avenue
Suite 300
Miami, FL 33172-3107
USA
Telephone: (305) 559-0500
Fax: (305) 222-0864

Brasil
Ingersoll-Rand do Brasil Ltda.
Tool & Hoist Division
Av. Dr. Cardoso de Melo, 1855
cj. 152-04548-005 Sao Paulo, SP
Brasil
Telephone: (55) 11 3049-8900
Fax: (55) 11 3846-4985

Chile
Ingersoll-Rand Chile
Nueva Tajamar 555, 15th fl.
Las Condes, Santiago
Chile
Telephone: (56) 2 339-7939
Fax: (56) 2 339-7940

Mexico
Ingersoll-Rand de Mexico S.A. de C.V.
Tool & Hoist Division
Blvd. Centro Industrial #11
Fracc. Industrial Puente de Vigas
54090 Tlanepantla, Edo. de Mexico
Mexico
Telephone: (52) 5 565-3061
Fax: (52) 5 565-3072

Europe/Middle East/Africa

Tool & Hoist Division Headquarters and European Customer Care Centre
Ingersoll-Rand
Zone du Chêne Sorcier
BP 62
78346 Les Clayes sous Bois Cedex
France
Telephone: +33 (0) 1 30 07 68 00
Fax: +33 (0) 1 30 07 69 80

United Kingdom
Ingersoll-Rand Distribution Centre
Swan Lane
Hindley Green
Wigan
Lancashire WN2 4EZ
England
Telephone: +44 (0) 1942 257131
Fax: +44 (0) 1942 526255

Asia/Pacific

Marketing/Sales/Service Headquarters
Ingersoll-Rand Asia Pacific Ltd.
23/F., 625 King's Road
North Point
Hong Kong
Telephone: (852) 2527-0183
Fax: (852) 2529-5976

Australia
Ingersoll-Rand Australia Ltd.
1 Hartnett Drive
Seaford, Victoria 3198
Australia
Telephone: (61) 3 9554 1600
Fax: (61) 3 9554 1611

India
Ingersoll-Rand Wadco Tools Ltd.
37-A, Site 4
Sahibabad Industrial Area
Ghaziabad 201 010 (UP)
India
Telephone: (91) 0120-4771-001 /2/3/4
Fax: (91) 0120-4771-005

For additional specific information on Ingersoll-Rand locations in Europe and Asia, visit our website at: www.irtools.com.

TECHNICAL QUESTIONS?
1 800 TOOL HLP
1-800-866-5457

How to obtain regular repair service.
Bring or send the complete tool prepaid to the nearest Service and Parts Distributor listed on page 63. State the following information on the packing list.

1. The nature of the trouble.
2. Stipulate if you want an estimate of the cost involved before proceeding with repairs.

How to obtain individual repair parts.
Individual repair parts may be obtained through your nearest Service and Parts Distributor. Please give him the I-R number of your tool and part number and description from the parts list.

How to obtain warranty repair service.
Bring or send the complete tool prepaid to the nearest Service and Parts Distributor listed on page 63 and state the following information on the packing list:

1. The nature of the trouble or failure.
2. Name and address of Jobber or Distributor from whom you purchased the tool.
3. Date tool was purchased and Proof of Purchase.
4. Application on which tool presently is being used.

Disclaimer: Nothing contained within this brochure is intended to extend any warranty or representation, expressed or implied, regarding the products described herein. Any such warranties or other terms or conditions of the sale of products shall be in accordance with Ingersoll-Rand Standard Terms and Conditions of Sale for such products which are available upon request.

Product improvement is a continuing goal at Ingersoll-Rand. Designs and specifications are subject to change without notice or obligation.

The new Ingersoll-Rand corporate and brand identity, introduced in 2000, is now being incorporated into product identification and packaging, as well as all communications. While most product photography in this catalog still reflects the previous symbol and logotype signature, you will soon see our new look on everything IR.

Ingersoll-Rand

Ingersoll-Rand

Productivity Solutions
1467 Route 31 South
Annandale, New Jersey 08801

www.irtools.com

© 2002 Ingersoll-Rand Company Form 52114-I Printed in USA